ZERO-MAX®

Providing Superior Motion Control Components with Passion, Quality and Service

History

Zero-Max® is a premium manufacturer of motion control and power transmission components worldwide. Since the Company was started in 1949 by Minnesota businessman Dick Gray, Zero-Max has provided solutions for high performance machinery that strives for robust, reliable, precise, and consistent high-volume output.

The Company started with a revolutionary design for a variable speed drive that allowed the output speed to be varied from "Zero" to "Maximum", which provided the idea for the Zero-Max brand. That name has carried on today for products including our high precision shaft couplings which offer **ZERO-**backlash and **MAX**imum performance.

Over the years we have expanded our product offering to not only include servo-rated shaft couplings and variable speed drives, but also other key motion control and power transmission components including Overhung Load Adaptors (OHLA), Overload Safety Couplings, Offset Couplings, Right Angle Gear Drives, Keyless Shaft Bushings, and Linear Actuators.

Today, Zero-Max products are used worldwide in a variety of applications. Chances are you have seen or used a product recently that was made by, or packaged by, a machine that used at least one Zero-Max product.

Culture

Zero-Max has developed a culture of continuous improvement. It is our nature to evaluate the system and look for ways to improve its performance and our service. Our goal is to give our customers a reason to come back.

We hire highly motivated and talented people who are committed to being responsive and to providing Best in Class Products and Service. We stand behind our products and work with our customers to identify ways to improve.

Zero-Max is committed to providing products that meet or exceed customer requirements and expectations. Let us help you solve your most demanding and challenging motion control scenarios.

Proven

Zero-Max has earned the reputation of delivering high quality, customizable, premium products that improve customer results. Designers of automated systems, production-grade machinery, and mobile systems that require high quality components to ensure precise, reliable, and consistent output have been trusting Zero-Max for over 70 years.



Zero-Max

High Quality, Customizable, Premium Products that **Improve Customer Results**

1949

Started in 1949, Zero-Max has been an industry leading manufacturer of motion control and power transmission components **for over 70 years**

Customization

We understand **every application is unique**. On some product lines over 50% of our sales are customized. We do this economically and for any quantity.

Culture

Zero-Max has a culture of **continuous improvement**. We do what we say we will, and we stand behind our products.

P.Q.S.

Our Focus is to provide Superior Components with **Passion, Quality, & Service**

Passion

Zero-Max has grown into a worldwide **solution provider** for motion control and power transmission components

Quality

ISO 9001:2015 Certified

ISO 9001:2015 CERTIFIED

Customer Service

Zero-Max is **responsive** to customer's needs with innovative design and exceptional customer service

Consistent

Zero-Max products are **known for**:

- Engineered Performance
- Reliable Operation
- Customizable Robust Designs
- ~~*Fast*~~ **Reliable Delivery**

Partners

Worldwide Partners known for:

- Premium Products
- Experienced Engineering Staff
- Clean Manufacturing Practices
- State-of-the-Art Technology



Company Overview
Quality / Capabilities
CD® Coupling
ServoClass® Coupling
Schmidt Offset Coupling
Control-Flex Coupling
Overload Safety
Posi-Lok® Keyless Bushing
ETP® Keyless Connection
Crown Gear Drives
Roh'Lix® Actuators
Adjustable Speed Drives & VRT™
Overhung Load Adaptors
Resources / Support

Quality

Quality is always top of mind at Zero-Max. From daily production meetings, to weekly team meetings, to quarterly management ISO meetings, all aspects of our Quality System are being continuously analyzed for improvement.

Our Quality Control staff is busy every day using our state-of-the-art inspection machinery and the latest software and statistical approaches to ensure consistent and reliable product is shipped from the factory every time. If Zero-Max makes an error, we will go to great lengths to correct it and make it right with our customer. Once the customer is satisfied that we have corrected the issue – we will not stop there. Our quality system directs us to evaluate the situation further to find the root cause and to take steps to implement a change that will prevent further occurrences.

ISO 9001:2015 CERTIFIED

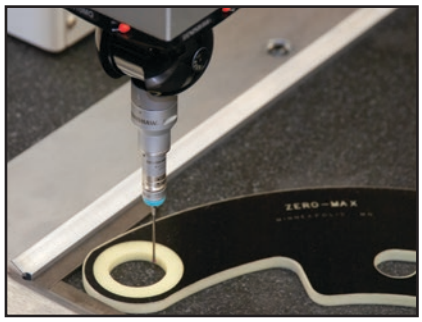



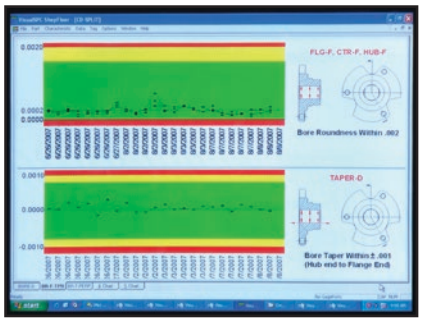

Engineered Performance

We hire talented and motivated engineers and equip them with the latest technologies. When you use a Zero-Max product you can be assured that it is fully engineered and will perform in challenging applications.

Reliable Operation

Many of our products have been in use for years or even decades. Our servo-rated couplings are maintenance-free and still outperform the competition. Reliability and a robust design are cornerstones of all Zero-Max products.

Robust

Our products are designed to work in the most challenging applications and environments. Careful design, quality materials, precise machining, and decades of experience are why companies worldwide choose Zero-Max for use in their most demanding applications.

Fast Reliable Delivery

Zero-Max takes pride in our long history of fast reliable delivery. Extensive inventory and flexible manufacturing make this possible. We continuously monitor and track our delivery time and on-time delivery metrics to ensure we are above industry standards.

Capabilities

Zero-Max is a vertically integrated manufacturer with engineering, sales, manufacturing, and quality control all in the same building. We work with our customers to ensure we have the most reliable offering in the industry. Zero-Max is known for our extensive product offering and customization capabilities.

Engineering uses the latest design tools and our production is executed with modern CNC machinery, which provides components with the accuracy required for the demanding applications we serve. We have **over 7 decades** of experience in manufacturing motion control and power transmission components.

In addition to our headquarters in Plymouth, MN, we also have a division in Denmark as well as strategic world partners to support our growing product line. To best serve our customers we have sales representatives and distributors across the United States and throughout the world.

Customized Solutions

We have the tools, machinery, and experience necessary to provide reliable, robust, and unique customized solutions

- Industry and Application Experts
- Engineering Assistance
- Any Quantity
- Fast Turn-Around

Support Available

Zero-Max has talented and motivated resources at your disposal

- Technical Questions
- Application Assistance
- Sizing and Selection
- Order or Sales Questions

Customer Focus

Zero-Max is organized with the customer in mind. We are intentionally structured to provide immediate and concentrated resources to solve customer challenges in a timely manner. A typical customer profile is difficult to describe, because Zero-Max solutions are used in virtually every industry. We provide innovative solutions on outdoor machinery from rock crushers and woodchippers, to factory machinery that packages your favorite foods, snacks, and beverages, to the latest technologies in computer chip manufacturing. No application is too unique or too demanding for a Zero-Max product. Regardless of your industry or application, Zero-Max is ready and willing to provide tailored solutions that exceed your expectations.

Core Values

Zero-Max is committed to providing superior components, fast & reliable delivery, and industry leading customer service. In every department of our company we pledge to stand behind our products, do what is right, and hold ourselves accountable to both our customers and to each other. Zero-Max has earned a reputation as a company that will say what we do and do what we say.



Provide Best in Class Service & Solutions



Hold Ourselves Accountable



Do the Right Thing

Company Overview
Quality / Capabilities
CD® Coupling
ServoClass® Coupling
Schmidt Offset Coupling
Control-Flex Coupling
Overload Safety
Posi-Lok® Keyless Bushing
ETP® Keyless Connection
Crown Gear Drives
Roh'Lix® Actuators
Adjustable Speed Drives & VRT™
Overhung Load Adaptors
Resources / Support

CD® Couplings for the Most Challenging Motion Applications

- Designed for today's most demanding servo motor and motion control applications
- Composite Disc (CD) Couplings are **precise**, **robust**, and **available** in sizes and models for every application
- **Zero Backlash** for use in precision applications
- High **torsional stiffness** and high **dynamic load capacity** ensure reliable machine operation
- **Precise** positioning under **high speed** reversing loads without fatigue for reliable 24/7 operation
- Unique patented composite disc design provides **high misalignment capacity** and **long operational life**
- **Clamp style hub** designs provide a **superior** method of shaft attachment
- Eco-Friendly, adapted to **RoHS** Directive with no banned substances

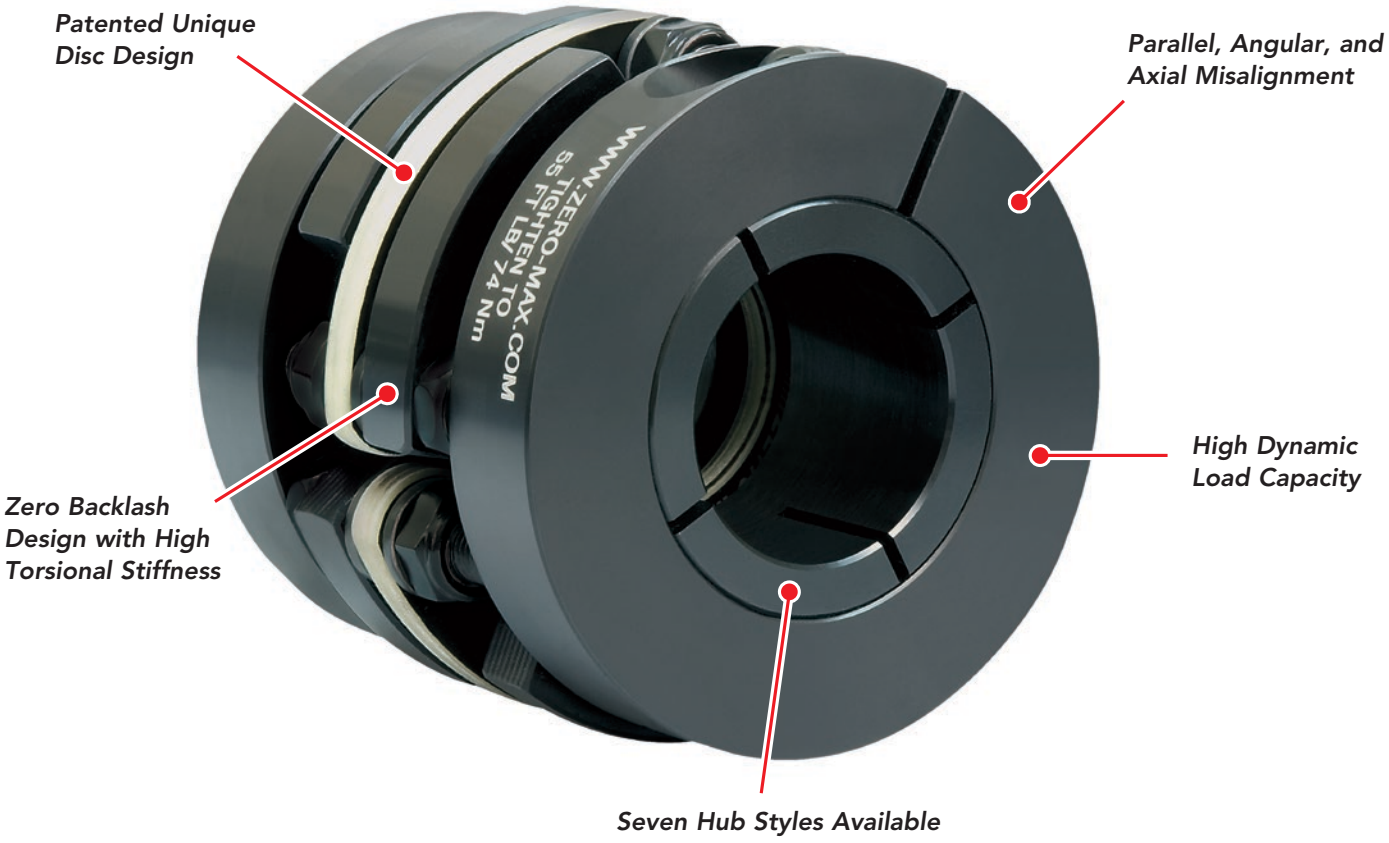

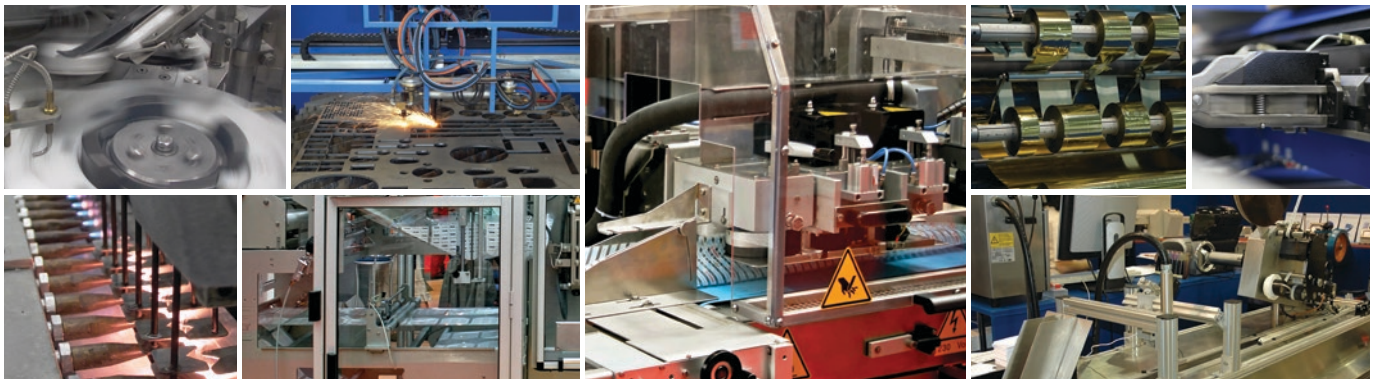

CD Couplings allow you to transmit high torque in a small space envelope. They are ideal for high cycle, indexing, and reversing applications where speed and repeatable accuracy are critical to keep 24/7 systems going.

CD Couplings withstand the punishment and stress of a servo motor application. In comparison, other couplings may have high torsional stiffness specifications; however, they can be too brittle to withstand the punishment of high speed reversing applications and shaft misalignments.

Standard and Custom CD Couplings are available for every application. Do you need higher misalignment or greater torque capacity in your coupling? Need more flexibility or torsional stiffness? Need a very large bore diameter coupling? Or a long floating shaft coupling? Zero-Max CD Couplings are available in a full range of styles, models and sizes to meet those needs. Zero-Max will design and build a custom CD Coupling to handle your unique application.

Composite Disc (CD) Advantages

High-Temperature Operation | High Torsional Stiffness | Electrical Insulating Properties | Disc Rated for Infinite Fatigue Life | High Shock Load Capacity



Zero Backlash | High Misalignment Capacity | No Fretting or Corrosion | Easy Installation & Replacement | Unitized Disc Pack | Chemical Resistant

- Available in Single-Flex, Double-Flex, Floating Shaft, and custom models
- Single and Double Disc models available in steel, stainless steel, or aluminum clamp style hubs
- Operating temperature range is -70° to +250°F (-57° to + 121°C)
- Composite Discs are resistant to many chemicals
- Hubs are machined to a high level of concentricity for smooth and quiet operation
- Steel, Aluminum, Stainless Steel, and Plated construction options
- Maintenance free
- Ideal for high precision applications including packaging machines, pick and place systems, printing machinery, machine tools and most systems using servo motors
- RoHS compliant – manufactured of RoHS compliant materials and contains no banned substances

Company Overview
Quality / Capabilities
CD® Coupling
ServoClass® Coupling
Schmidt Offset Coupling
Control-Flex Coupling
Overload Safety
Posi-Lok® Keyless Bushing
ETP® Keyless Connection
Crown Gear Drives
Roh'Lix® Actuators
Adjustable Speed Drives & VRT™
Overhung Load Adaptors
Resources / Support

The Single Flex Composite Disc Coupling is an excellent choice for zero backlash applications. The unique design delivers two features that are not often found in a precision coupling – **high torsional stiffness** and **high durability!**

The compact size and clamping system allow this coupling to fit into many applications. This design is also capable of being used in very high speed applications with slight modifications.

Features/Benefits:

- Zero Backlash
- Torsionally Stiff
- Excellent for Reversing Loads
- Smooth Operation at High Speeds
- Misalignment Capacity
- Compact
- ~~F~~***Fast*** **Delivery**

Options:

- Steel, Aluminum, and Stainless Steel Models
- Clamping Hubs, Set-Screw Hubs, and QD Hub Options
- Clamp Style Hubs Available With or Without Keyway
- **Fully Customizable**



Set Screw Hub



QD Style Hub

The Single Flex Composite Disc Stainless Steel Coupling is an excellent choice for zero backlash applications that require stainless steel. The hub and hardware are made from 300 Series stainless steel and the composite disc material is highly resistant to many harsh chemicals.

The A1C Aluminum Hub Single Flex Composite Disc Coupling features low weight and inertia, making it an excellent choice for servo motor applications. This unique black anodized aluminum coupling design allows for high torsional stiffness, shaft misalignment capacity, and precise operation with additional flexibility.

The **integrated clamping hub** design of the A1C Hub style allows for a wider range of shaft bores and higher shaft clamping forces while maintaining precise, high-performance specifications and a compact size to fit into many applications. Maintenance-free performance makes it an ideal choice for critical and high throughput applications.



Single Flex Steel

- Maximum Strength
- Black Oxide Finish



Single Flex Aluminum

- Low Weight and Inertia
- Black Anodized Finish



Single Flex Stainless Steel

- Corrosion Resistant
- Clamping or Set-Screw Hubs



Single Flex A1C Aluminum

- Low Weight and Inertia
- Maximum Clamping Force

The Double Flex Composite Disc Coupling is ideal for precision applications that require more misalignment capacity than our Single Flex design. The coupling's large misalignment capacity, high torsional stiffness, and overall high performance specifications make this coupling a great choice for a wide variety of applications.

Features/Benefits:

- Zero Backlash
- Torsionally Stiff
- Excellent for Reversing Loads
- Smooth Operation at High Speeds
- High Misalignment Capacity
- Very Low Reaction Loads from Misalignment
- ~~*Fast*~~ **Delivery**

Options:

- Steel and Aluminum Models
- Clamping Hubs, Set-Screw Hubs, and QD Hub Options
- Clamp Style Hubs Available With or Without Keyway
- **Fully Customizable**



Set Screw Hub



QD Style Hub

The AC Aluminum Hub Double Flex Composite Disc Coupling is an excellent choice for higher misalignment needs that also require low weight and inertia. The high torsional stiffness, high durability, low inertia, and clamping hub system enable this coupling to fit into many applications.

The A1C Aluminum Hub Double Flex Composite Disc Coupling is ideal for applications that require higher misalignment capacity. This unique black anodized aluminum coupling design allows for high torsional stiffness and precise operation with additional flexibility for misalignment.

The **integrated clamping hub** design of the A1C Hub style allows for a wider range of shaft bores and higher shaft clamping forces. This coupling's large misalignment capacity, high torsional stiffness, and overall performance specifications make it a great fit in many applications. Maintenance-free performance makes it an ideal choice for critical and high throughput applications.



Double Flex Steel

- Maximum Strength
- Black Oxide Finish



Double Flex Aluminum

- Low Weight and Inertia
- Black Anodized Finish



Double Flex A1C Aluminum

- Low Weight and Inertia
- Maximum Clamping Force

Company Overview
Quality / Capabilities
CD® Coupling
ServoClass® Coupling
Schmidt Offset Coupling
Control-Flex Coupling
Overload Safety
Posi-Lok® Keyless Bushing
ETP® Keyless Connection
Crown Gear Drives
Roh'Lix® Actuators
Adjustable Speed Drives & VRT™
Overhung Load Adaptors
Resources / Support

The Composite Disc Floating Shaft Coupling is zero backlash and torsionally stiff, yet provides superior misalignment capacity. Ideal for extended length applications, the patented Composite Disc provides excellent support for the floating shaft component with very low radial load on the connected equipment and bearings. Precision hardware and precise machining ensures smooth and accurate operation.

Features/Benefits:

- Zero Backlash
- Torsionally Stiff
- Excellent for Reversing Loads
- Very Low Reaction Loads
- **Made to Exact Length Requirements**
- ~~**Fast** Delivery~~

Options:

- Available in Both Set Screw and Clamp Style Hubs
- Material Options
- Dynamic Balancing Available for High Speed
- Clamp Style Hubs Available With or Without Keyway
- **Fully Customizable**

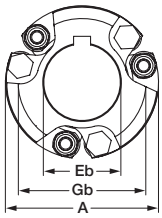

Set Screw Hub

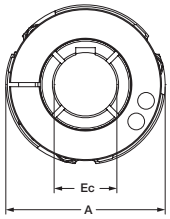

Clamp Style Hub



CD® Couplings Applications

Possible Applications

- Packaging Machines
- Converting Machines
- Automation
- Test Equipment
- Printing Presses
- Form-Fill-Seal Machines
- Bottling Machines
- Water Jet and Laser Cutting
- Food Industry
- Robotics
- Thermoforming
- Conveyors
- Pumps
- Compressors
- Machine Tools
- Harsh Environments
- Any Unique Requirement
- Any Servo Motor Driven Machine

First released in 1989, Zero-Max is proud to be the world leader in Composite Disc Couplings

ZERO-MAX
Est. 1949

There are over 100 standard models and sizes of CD Couplings to fit most applications. If a standard CD Coupling will not satisfy your requirements, we will quickly design a solution that will. With experience from thousands of different applications, our extensive database brings instant answers to your questions.

Custom Designs

No application is too large, too small, or too difficult for a CD Coupling. Zero-Max has the ability to provide imaginative solutions for virtually every coupling need.

Design Engineering Assistance

Zero-Max Engineering is continually involved in custom projects using the latest technology available to solve your coupling needs. Our recommendations are based on decades of coupling and industry experience.

Quality Service

From the first contact with the factory to the completion of the approval drawing, to delivery of the coupling, Zero-Max will provide quality service throughout the process, including after-sale service and support.

Customization Options

- Higher Torsional Stiffness
- Higher Flexibility Disc Packs
- Higher Torque Capacity
- Different Materials/ Platings
- Special Bores
- Customized Hubs
- Special Mounting Features
- High Speed Operation
- Phase-Adjustment
- Integrated Features
- Larger Sizes
- Smaller Space Requirements
- Very Long Floating Shafts



Key Is The Patented Disc Design

The key to the high performance capabilities of the CD Coupling lies in the Composite Disc Pack. Everything about this unique part contributes to its high performance characteristics. The shape, the cutting process, the material used, the order and the orientation of the layers, and even the coating have important significance. Zero-Max has been perfecting this design for decades and has accumulated a vast database of solutions.

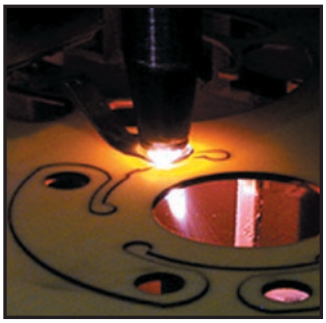

Finite Element Analysis

Using Finite Element Analysis (FEA), the disc design can be easily modified along with changes in the composite material to fit your specific application requirements.

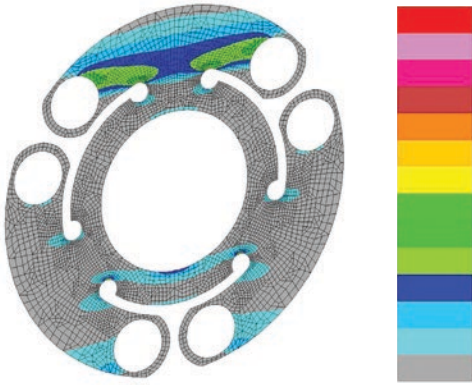

Design, Analysis, Test, Production

Zero-Max is a vertically integrated manufacturer with in-house design, testing, quality control, and production teams. All our processes are geared toward supplying the correct coupling at the lowest cost and in the shortest lead-time.

The Zero-Max test laboratory is capable of all types of static and dynamic testing to ensure that the design specifications are met.

Company Overview
Quality / Capabilities
CD® Coupling
ServoClass® Coupling
Schmidt Offset Coupling
Control-Flex Coupling
Overload Safety
Posi-Lok® Keyless Bushing
ETP® Keyless Connection
Crown Gear Drives
Roh'Lix® Actuators
Adjustable Speed Drives & VRT™
Overhung Load Adaptors
Resources / Support

ServoClass® Couplings for Today's Demanding Motion Applications

- ServoClass Couplings are ideal for **precise positioning**, **high speed**, **reversing loads**, and applications requiring **high repeatability**
- **High Precision and Performance** ideal for demanding servo motor motion control applications
- **Zero backlash** and low hysteresis ensure repeatable precise positioning
- **High torsional stiffness** for use in dynamic and reversing applications
- **Low inertia** for high speed applications
- **Low reaction loads** reduce stress and increase system lifespan
- **Eco-Friendly**, RoHS Compliant with no banned substances



- Available in 14 sizes in single and double disc models
- Double disc models provide highest misalignment capability
- Operating temperature range is -22° to +212°F (-30° to +100°C)
- Torque ratings range from 0.25 to 250Nm (2.2 to 2,213 in-lbs)
- Hubs and center members manufactured of aluminum alloy for strength, durability, and are treated to prevent oxidation and to preserve appearance
- Disc packs are made of 304 stainless steel
- Couplings are precisely assembled using high strength, corrosion resistant fasteners
- Integral clamp style hubs provide fast, easy mounting, and a secure shaft connection
- RoHS compliant – manufactured of RoHS compliant materials and contains no banned substances

Today's servo motor applications are more demanding than ever. The precision positioning requirements and high reverse load characteristics of servo motor applications necessitate a coupling design that specifically addresses the needs of these sophisticated systems.

High Torsional Stiffness is an important quality of any high performance coupling. Low torsional stiffness couplings will reduce system performance and accuracy. The high torsional stiffness characteristic of the Zero-Max ServoClass coupling provides precise position accuracy and increases the system resonant frequency above the resonant operating frequency of most equipment.

Zero-Backlash is a key requirement of a high performance servo coupling. A coupling may be considered zero backlash and still have a large amount of torsional windup. Zero Backlash along with High Torsional Stiffness allows the ServoClass Coupling to maintain the same angular relationship between the input and output shaft without lost motion.

High Misalignment Capacity of a coupling is also important in a motion control system. Usually, the alignment of a well manufactured servo system will be very good. Over time and under high load conditions, this alignment may deteriorate. The ServoClass coupling will allow for this misalignment while remaining a torsionally stiff and zero backlash connection.

Low Reaction Loads on the system's bearings and connected components is not only desirable, it is one of the primary reasons for using a flexible coupling. The Zero-Max ServoClass coupling design provides flexibility for inevitable misalignment, therefore minimizing the reaction loads to the servo motor and system bearings to provide maximum life.

Low Inertia is a critical feature of a superior servo coupling. The inertia should be low so that it does not add significantly to the overall inertia of the servo system. The lower the inertia, the less energy required by the motor to move the system, and therefore higher acceleration is possible.



Double-Flex ServoClass Coupling

- Most Popular
- High Misalignment, Lowest Reaction Loads
- Angular, Axial, and Parallel Misalignment Capacity



Single-Flex ServoClass Coupling

- Compact
- Provides Shaft Support
- Angular, Axial, and Limited Parallel Misalignment Capacity

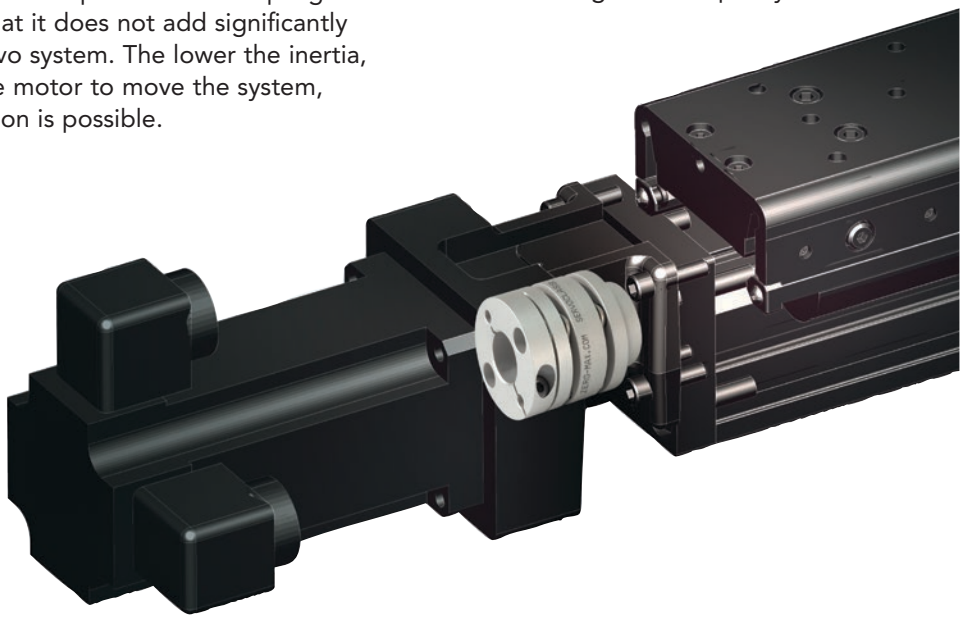

Company Overview
Quality / Capabilities
CD® Coupling
ServoClass® Coupling
Schmidt Offset Coupling
Control-Flex Coupling
Overload Safety
Posi-Lok® Keyless Bushing
ETP® Keyless Connection
Crown Gear Drives
Roh'Lix® Actuators
Adjustable Speed Drives & VRT™
Overhung Load Adaptors
Resources / Support

Schmidt Offset Shaft Couplings Provide High Precision for Parallel Offset Shafts

- Schmidt Offset Couplings offer great flexibility in shaft displacement while maintaining **constant torque transmission** and **phase relationship**
- Provide **constant angular velocity**
- Impose **no sideloads** on shafts or bearings
- **Eliminate** radial shaft vibrations
- **No performance loss** with changing offset
- Very **high torque capacity** available
- **High shaft rotational speeds** allowed
- **Compact design** offers significant space savings over alternatives



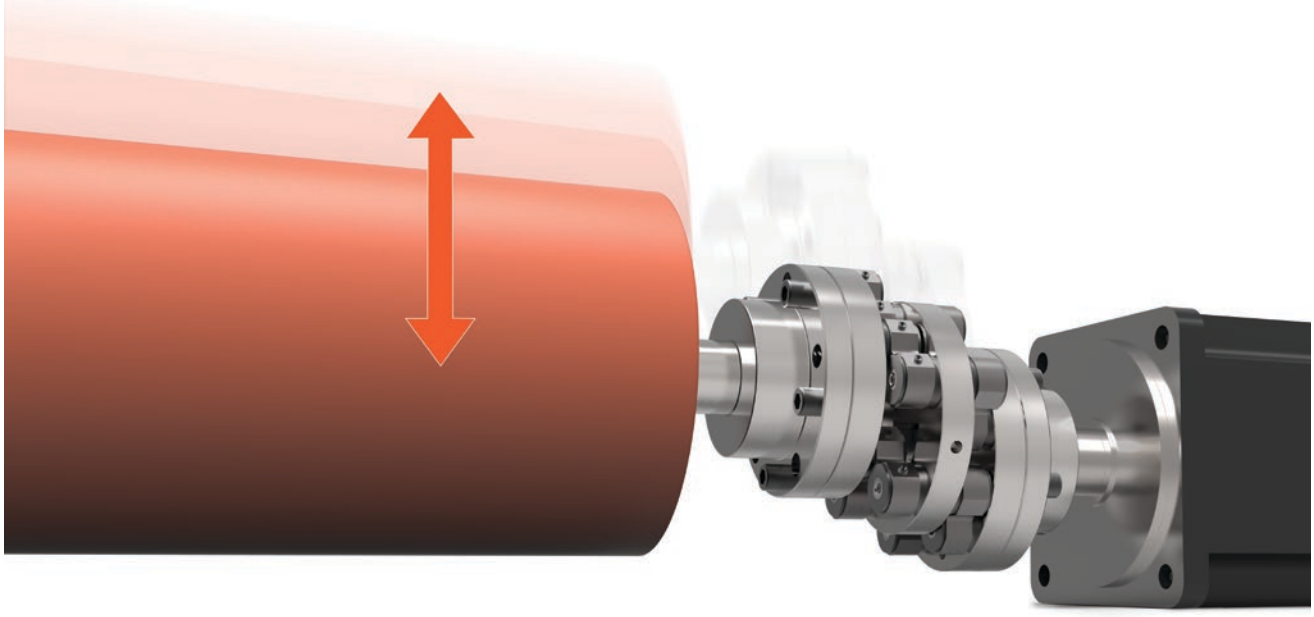

Schmidt Offset Couplings provide machine designers with a proven method to ensure machines operate with constant phase accuracy and constant speed throughout the rotation and cycle of the machine. These couplings allow for **dynamic misalignment changes** with no performance loss.

Where precise performance of system components is required and reduced machine size is important, the Schmidt Offset Couplings provide a solution.

Available in a large range of sizes:

- Parallel Shaft Displacement up to 17 Inches
- Torque Ratings up to 459,000 in-lbs
- Shaft Speeds up to 2,500 RPM for standard couplings
- Custom Coupling and Hub Designs Available

Typical applications include printing, paper, converting, metal processing, automated assembly, and many more.



See Catalog for full details on sizes, specifications, application examples, and **life calculations**

Contact Factory for size, selection, and application assistance, including hub options and coupling lifetime estimates.

Replace Universal Joint Shaft for Better Performance and Space Savings

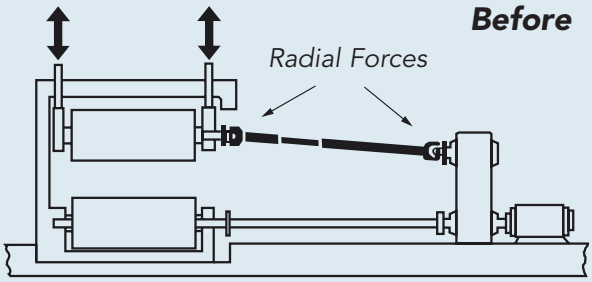

Diagram shows how this can be achieved with double universal joints – but causes radial forces at the joints and requires large lateral space

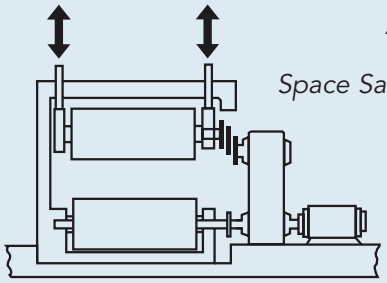

Diagram overcomes both problems – by the use of a Schmidt Offset Coupling

No Sideloads

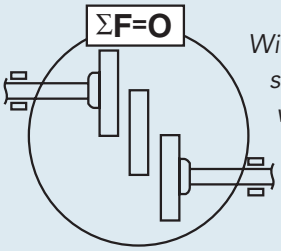

Wide range of parallel shaft displacement without sideloads

Constant Torque and Angular Velocity

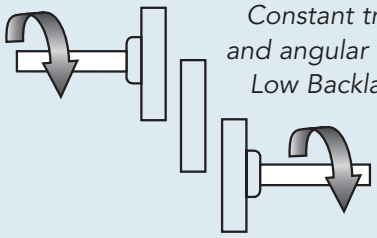

Constant transmission of torque and angular velocity. Low and Ultra Low Backlash models available.

Eliminate Radial Vibration

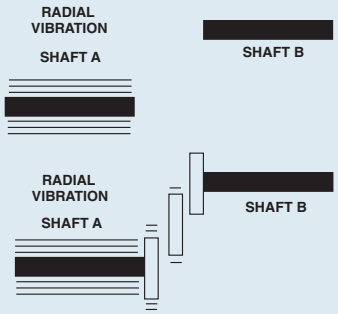

Elimination of radial vibration

Consistent Performance

No performance loss by increasing shaft displacement

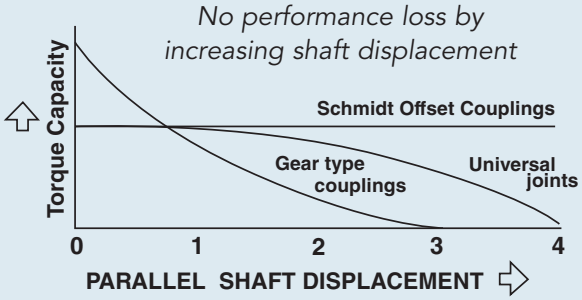

Customization Options

- Special Offset Ranges
- Reduced Backlash Models
- Higher Torque Capacity
- Special Materials and Platings
- Special Lubrication
- Maintenance Free Models
- Special Hub Mounting / Bores
- Integrated Hubs
- Reduced Size



Visit www.zero-max.com for video showing Schmidt Offset Coupling operation

Company Overview
Quality / Capabilities
CD® Coupling
ServoClass® Coupling
Schmidt Offset Coupling
Control-Flex Coupling
Overload Safety
Posi-Lok® Keyless Bushing
ETP® Keyless Connection
Crown Gear Drives
Roh'Lix® Actuators
Adjustable Speed Drives & VRT™
Overhung Load Adaptors
Resources / Support

Schmidt Inline Coupling

Schmidt Inline Couplings are a torque-rigid type, designed with two pairs of parallel links installed 90 degrees out of phase with each other. This linkage arrangement allows for the precise transmission of torque and constant angular velocity between shafts.

- High Accuracy & Low Backlash
- Moderate Parallel Misalignments Allowed
- Multiple Sizes up to 35,000 in-lb
- Custom & Higher Torque Models Available

Typical applications include feeders, embossers, compactors, printing presses and many others.

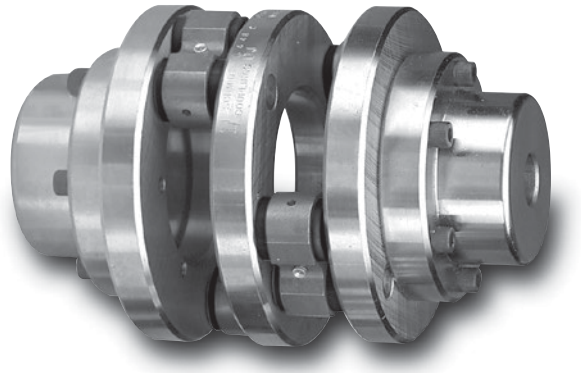

Schmidt Inline Coupling

Schmidt 5-D Coupling

Schmidt 5-D Couplings are torque-rigid couplings that accommodate axial, parallel and angular shaft displacement. These couplings are a modification to the Schmidt Inline Coupling, designed to accommodate up to **5-degrees** of angular shaft misalignment.

- Easily Accomodates Misaligned Shaft Position
- Reduction in Sideloads Due to Misaligned Shafts
- Constant Angular Velocity
- Multiple Sizes up to 500,000 in-lb

Typical applications include packaging machines, printing presses, feeders, and other critical industrial machinery.

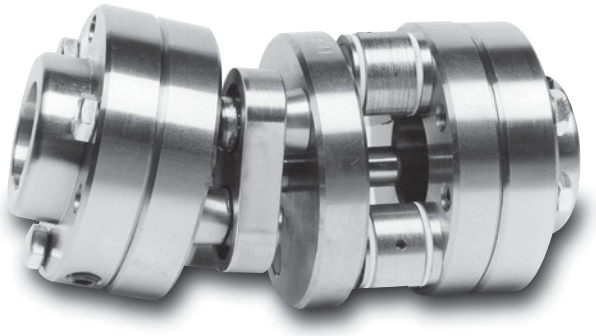

Schmidt 5-D Coupling

Schmidt Flexible Coupling

Schmidt Flexible Couplings provide power transmission for slightly misaligned shafts and are designed to adapt to various drive conditions. The molded flexible center disc is preloaded on the precision shafts of the end disc which give the coupling a zero backlash condition. Different configurations and disc durometers available.

- Easy Installation
- Electrically Isolated Hubs
- Zero Backlash
- Single Disc, Double Disc & Double Disc Spacer Models

Typical applications include collators, printing machines, packaging machines, pumps, and many others.

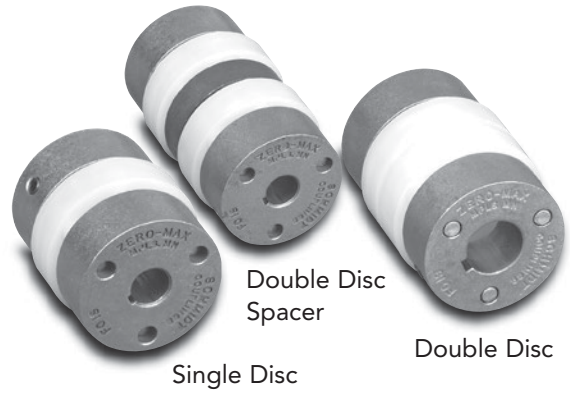

Schmidt Flexible Coupling

Control-Flex Couplings are Ideal for Encoders and Instrumentation

The Control-Flex Coupling was developed to satisfy today's higher performance requirements. This coupling is **ideal for encoder and instrumentation applications.**

Due to the **unique design** and construction of the Control-Flex Coupling, reaction forces due to transmission of torque and unavoidable shaft misalignments are considerably smaller when compared to common flexible couplings.

Clamp-style hubs provide for an easy, precise and secure connection to the shaft. Control-Flex Couplings have two hubs and a flex member that is affixed to the hubs with pins. This allows for **easy installation** and maintenance if needed.

- **High shaft misalignment capacity** makes installation easy
- **Low reaction loads** improve performance and life of encoder or instrumentation device
- **Electrically insulating** flex element adds protection from stray currents
- **Zero backlash** increases accuracy of feedback system
- **Low Weight** design minimizes impact on overall system inertia
- **Compact design** saves critical space in system
- **Maintenance-Free** design



At the heart of the Control-Flex coupling is its unique Flex Disc which is based on a parallel linkage system. This Flex Disc allows for **superior parallel**, **angular**, and **axial shaft misalignments**, while maintaining constant transmission of torque and angular velocity. The Flex Disc also provides **electrical isolation** between the hubs.



Single Flex Disc Control-Flex Coupling
- Clamp-Style Hubs
- Most Compact
- Most Flexible

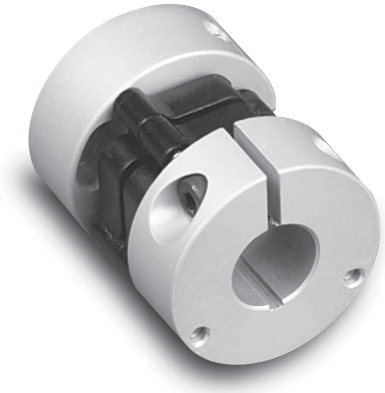

Double Flex Disc Control-Flex Coupling
- Clamp-Style Hubs
- Higher Torque Capacity
- Higher Torsional Stiffness



Bolted-Style Control-Flex Coupling
- Drop-Out Flex-Disc Design
- Highest Torque Capacity
- Highest Torsional Stiffness

Company Overview
Quality / Capabilities
CD® Coupling
ServoClass® Coupling
Schmidt Offset Coupling
Control-Flex Coupling
Overload Safety
Posi-Lok® Keyless Bushing
ETP® Keyless Connection
Crown Gear Drives
Roh'Lix® Actuators
Adjustable Speed Drives & VRT™
Overhung Load Adaptors
Resources / Support

Torq-Tenders® Provide Reliable Torque Overload Protection

- Quick and Reliable release to prevent system damage if a jam-up or excessive loading occurs
- Spring selection allows for variety of trip-points and the option for in-field torque setting changeovers
- Tamper-proof design ensures integrity of the machine design with no special set-up required
- Standard Torq-Tenders are bi-directional, providing the same protection regardless of rotation direction
- Automatic reset when overload is removed
- Enclosed design of the Torq-Tender enables it to operate in a wide variety of industrial environments
- Every Zero-Max Torq-Tender is made from durable heat-treated steel for a long operational life
- If used as coupling, the Torq-Tender functions as both a flexible shaft coupling (accommodates shaft misalignment) and as a mechanical torque limiter



How it Works

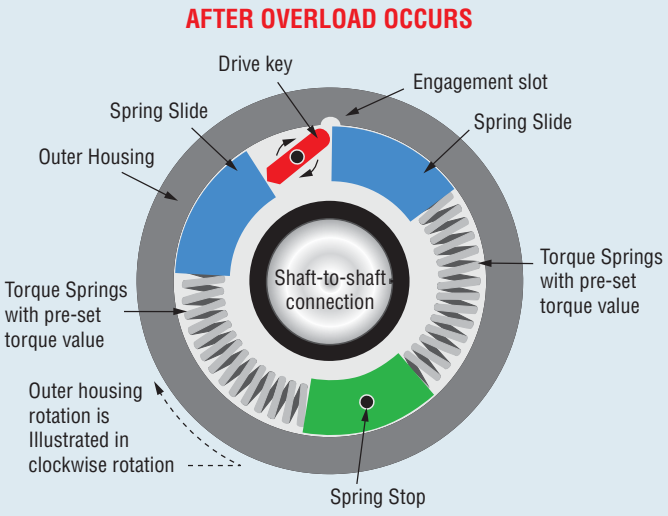

The torque value is determined by the force of the springs that are installed in the unit. The spring force acts upon the slides that are part of the inner shaft. These slides transmit force that will hold the drive key into an engagement slot in the outer housing. When the torque load exceeds the rating, (determined by precision tempered torque springs) the Torq-Tender's drive key will pivot out of the engagement slot to disengage the Torq-Tender. After disengagement the torque limiter does not have significant resistance to rotation. Upon completion of one shaft rotation the torque limiter will automatically try to re-engage. Once the overload is removed and speed reduced, the drive key will snap into the engagement slot and the Torq-Tender will be reset for the next overload event.

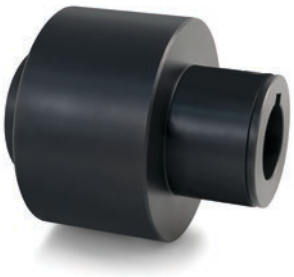

Shaft-to-Shaft Mount – Type C

Functions as a shaft coupling and a torque limiter

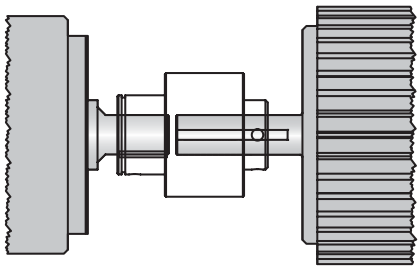

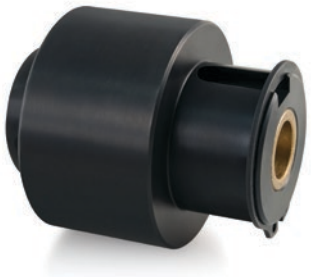

Through Shaft Mount – Type B

Allows shaft to pass through the full length and for the sprocket, pulley, etc. to be mounted externally

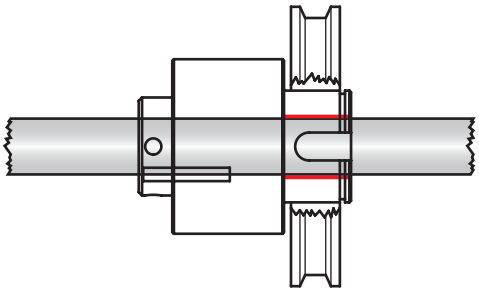



End of Shaft Mount – Type S

Used when the shaft is not long enough to reach the radial load from the sprocket, pulley, etc.

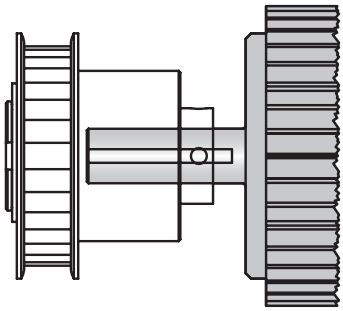



End of Shaft Mount – Type JF

Used when limited shaft length is available and the sprocket, pulley, etc. can be face mounted with bolts

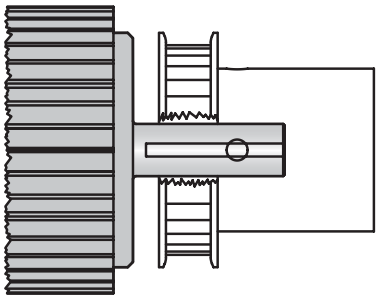



End of Shaft Mount – Type J

Used when limited shaft length is available and when using a Type B or C hub style sprocket, pulley, etc.

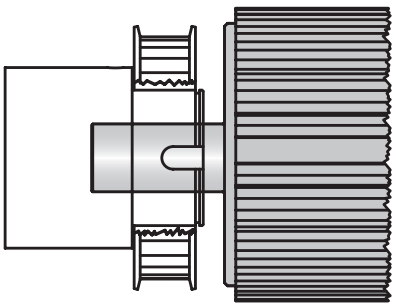

Company Overview
Quality / Capabilities
CD® Coupling
ServoClass® Coupling
Schmidt Offset Coupling
Control-Flex Coupling
Overload Safety
Posi-Lok® Keyless Bushing
ETP® Keyless Connection
Crown Gear Drives
Roh'Lix® Actuators
Adjustable Speed Drives & VRT™
Overhung Load Adaptors
Resources / Support

7 Model Sizes Cover Torque Range of 3 to 3,000 in-lb

Model	Torque Range (in-lb)	Torque Range (Nm)
TT1X	3 to 60	0.3 to 6.8
TT2	4 to 140	0.5 to 15.8
TT2X	18 to 350	2.0 to 39.5
TT3	18 to 500	2.0 to 56.5
TT3TAN	240 to 1,000	27.1 to 113
TT3X	300 to 1,500	33.9 to 169
TT4X	750 to 3,000	84.7 to 339



See Catalog for full details on torque, size, actuating, and shaft bore options for each model type

Actuating Options



Actuating Pin: Pin is forced out radially from the main body when overload occurs. Used to contact limit switch for shutdown or warning.

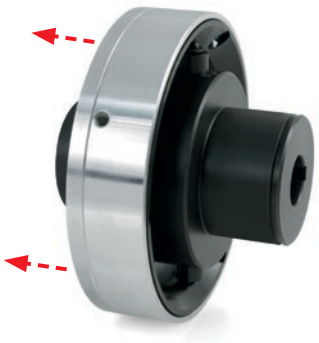

Actuating Disc: Disc is forced out axially from the main body when overload occurs. Used to contact limit switch for immediate shutdown or warning.

Customization Options

- Special Materials, Platings, and Coatings
- Special Bore Types
- Added Mounting Features
- Dimensional Modifications
- Food Grade or Special Grease
- Different Torque Setting in Each Direction
- Unidirectional Overload Protection
- O-Ring Seals

Overload Safety Applications

- Packaging Machines
- Mixing Machines
- Conveyors
- Automated Valves
- Gearbox Protection
- Timing Screws
- Industrial Machinery
- Overtightening Prevention

H-TLC Torque Limiters Provide an Alternative to Friction-Type Limiters

The unique features in the Zero-Max H-TLC give the designer wider parameters in solving system overload problems.

H-TLC Is Durable. The H-TLC torque limiter is designed for hostile environments including those subjected to moisture, corrosion, acids, salts or any number of other contaminants. The H-TLC will never rust because its major components are designed from special polymer materials that are resistant to water, salts, mild acids and most other contaminants.

H-TLC Is Dependable. It works on a spring loaded convex pin and detent design which reacts to overloads, but not to lubricants. Unlike friction-type designs, you can submerge an H-TLC in oil and still depend on precise disengagement at your design limits.

H-TLC Is Repeatable. Unlike friction-type torque limiters, the H-TLC does not generate an amount of heat which can alter the transmittable torque. The H-TLC's resilient materials will not build up, or retain, the kind of heat seen in friction designs.

The Torque Setting Is Adjustable. If operating conditions require periodic changes in torque settings, the H-TLC gives you that ability. Simply adjust the unit's external torque adjustment screws until the desired new torque setting is reached.

The H-TLC Will Trigger Automatic Alarm and Shut-Down Systems. One of the H-TLC's most important special features is its ingeniously simple and inexpensive actuating disc assembly. The optional actuating disc is used to provide a mechanical displacement that can be sensed by a customer supplied limit switch to initiate the proper response.

Multi or Single Position Re-Engagement. The H-TLC-500 has 4 re-engagement positions and the H-TLC-1000 has 6. If your application must maintain phase, you can order special H-TLC units with only a single re-engagement point, consult factory.



H-TLC Overload Safety Couplings

- Shaft-to-Shaft Coupling Types
- Thru-Shaft Mount Types
- Adjustment Screw Options



Actuating Disc: Optional actuating disc is forced out axially from the main body when overload occurs. Used to contact limit switch for immediate shutdown or warning. **Disc can be added in the field.**

2 Model Sizes cover Torque Range of 4 to 500 in-lb

Model	Torque Range (in-lb)	Torque Range (Nm)
H-TLC-500	4 to 150	0.5 to 16.9
H-TLC-1000	40 to 500	4.5 to 56.5

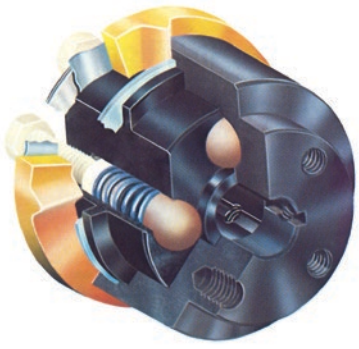

Company Overview
Quality / Capabilities
CD® Coupling
ServoClass® Coupling
Schmidt Offset Coupling
Control-Flex Coupling
Overload Safety
Posi-Lok® Keyless Bushing
ETP® Keyless Connection
Crown Gear Drives
Roh'Lix® Actuators
Adjustable Speed Drives & VRT™
Overhung Load Adaptors
Resources / Support

PSL Mechanical Shaft Connections Provide Easy and Reliable Shaft-to-Hub Connection

- Posi-Lok® (PSL) keyless shaft bushings are locking devices that provide a secure shaft-to-hub connection
- Utilizes tapers that form a mechanical locking wedge, pressing the inner sleeve against the shaft and outer sleeve against the hub
- Connection transmits high levels of torque and resists axial forces
- Very good axial and radial concentricity
- Zero backlash, reduces fretting corrosion
- Eliminates the need for keyways, tapers, or tapped holes, which can weaken shafts or cause excess wear



Posi-Lok shaft locking bushings reduce design time, reduce downtime, and save valuable resources

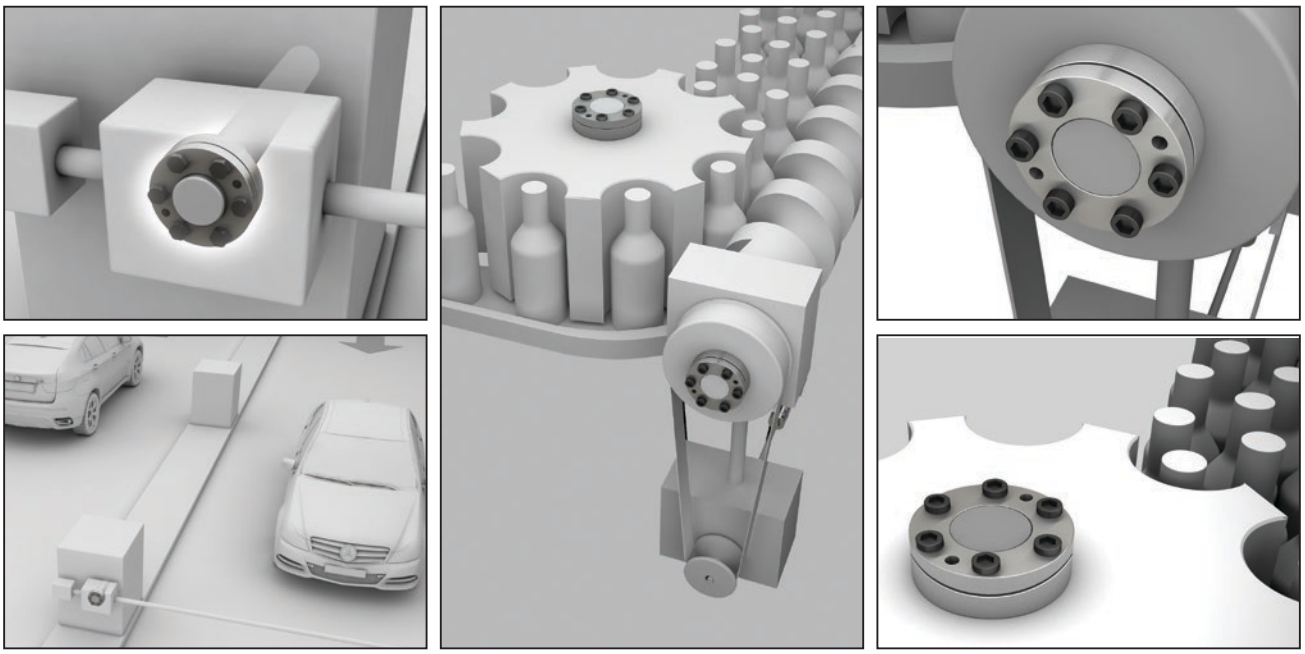

Proven Design

- Easy to Install
- Zero Backlash
- Mount/Dismount at Any Time
- No Keyways Required
- Maintenance Free
- Reduced Wear on Components
- Very Good Concentricity
- **Selection, Mounting, and Sizing Help Available**

Posi-Lok Keyless Bushings

- Wide Variety of Metric and English Sizes
- Steel, Nickel-Plated, and Stainless Steel Options
- Flanged Bushings
- Flangeless Bushings
- Excellent Concentricity
- Wide Range of Torque Capacity
- Multiple Taper Designs
- ~~***Fast*** **Delivery**~~



PSL-G Model

- Double Taper wedge design
- Flangeless design
- Maximum torque capacity
- Widest range of sizes
- Steel and Nickel-Plated options
- Supports shafts from 19mm to 120mm

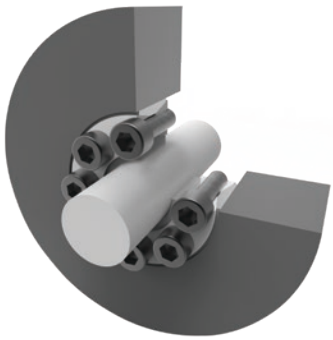



PSL-D Model

- Single Taper wedge design
- Flangeless design
- Lower contact pressure
- Smaller shaft sizes supported
- Steel and Nickel-Plated options
- Supports shafts from 6mm to 50mm

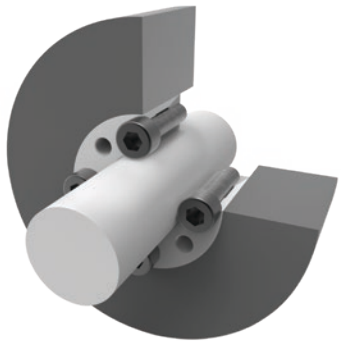



PSL-K Model

- Single Taper wedge design
- Flanged design
- Metric and English shaft sizes
- Smaller shaft sizes supported
- Steel, Nickel-Plated, and Stainless Steel options
- Supports shafts from 6mm to 42mm and 1/4" to 1"

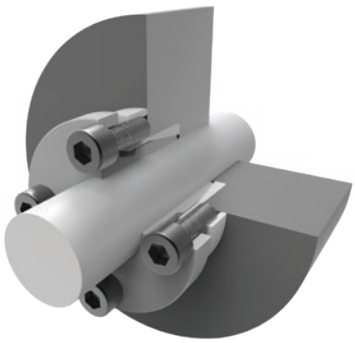



Company Overview
Quality / Capabilities
CD® Coupling
ServoClass® Coupling
Schmidt Offset Coupling
Control-Flex Coupling
Overload Safety
Posi-Lok® Keyless Bushing
ETP® Keyless Connection
Crown Gear Drives
Roh'Lix® Actuators
Adjustable Speed Drives & VRT™
Overhung Load Adaptors
Resources / Support

ETP® Hydraulic Shaft Connections Provide Fast and Precise Shaft-to-Hub Connections

- ETP hydraulic based bushings are ideal for positioning and locking any hub to a shaft
- Ideal for applications that require **quick** mounting, **frequent** mountings or adjustments, and the highest level of concentricity and **precision**
- ETP Connections eliminate the need for keyways or tapers which can weaken shafts or cause excess wear
- ETP bushings are field-proven in countless industrial applications around the world
- Easy to mount, maintenance free, and available in a variety of models and materials to fit almost any application and environment

**ETP trademarks are owned by ETP Transmission AB, Sweden*



ETP are the most precise shaft locking bushings available!

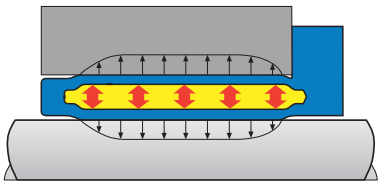

ETP keyless connections operate on scientist Blaise Pascal's principle of pressure propagation in liquids. A hydraulic pressure medium confined in a double-walled sleeve is pressurized, which expands the double-walled sleeve uniformly to give even contact pressure again the shaft and hub.

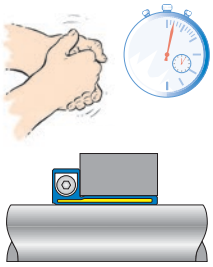

Quick mounting

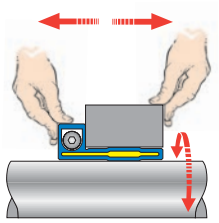

Easy and accurate to positioning

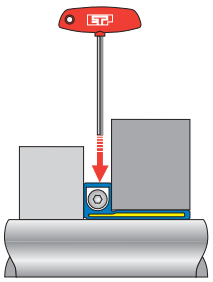

Saves space along the shaft

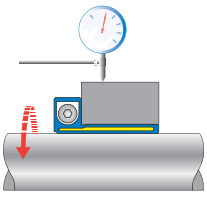

Ultra-low runout

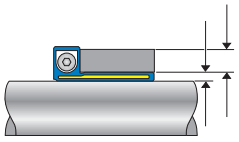

Small built-in dimensions

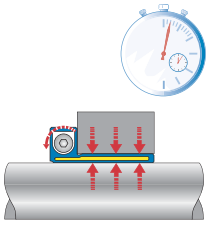

Quick dismantling

Customized Designs

ETP Keyless Connections can also be customized for unique applications. Our engineering staff, resources, and experience have allowed for many solutions that meet very specific needs.

- Custom Shapes and Dimensions
- Modified Mounting Methods
- Specific Mounting Pressures
- Special Mounting Features
- Axial Engagement
- Torque Limiting
- Higher Torque or Load Transmissions
- **Many More...**

ETP Keyless Connections

- Fast, Frequent, Precise Mounting
- Excellent Concentricity
- Ultra-Low Run-Out
- Single-Screw Options
- Wide Variety of Metric and English Sizes
- Multiple Mounting Options
- Small Built-in Dimensions
- Hydro-Mechanical Solutions
- Steel and Stainless Steel Options
- **Technical Assistance Available**
- **~~Fast~~ Delivery**



ETP-CLASSIC®

- High radial load capacity
- Fast mounting and dismantling
- Precision adjustment of the hub during mounting
- Low tightening torque and small number of screws makes mounting easy and quick
- Precise concentricity, even after many mountings
- Low runout, 0.03–0.06 mm
- Handles temperature range of -22°F to 185°F/-30°C to 85°C
- Also available in stainless steel



ETP-EXPRESS®

- Single screw actuation
- Extremely fast and frequent mounting/dismantling
- Radial screw positioning saves space along the shaft
- Accurate positioning, no axial movement when mounting
- Excellent concentricity, even after many mountings
- Excellent runout, ≤0.02 mm
- Handles temperature range of -22°F to 185°F/-30°C to 85°C
- Also available in stainless steel



ETP-TECHNO®

- Single screw actuation in most sizes (Largest sizes have two)
- Extremely fast and frequent mounting/dismantling
- Radial screw positioning saves space along the shaft
- Accurate positioning, no axial movement when mounting
- Excellent concentricity, even after many mountings
- Superior runout, ≤0.006 mm
- Dual sealing system
- Handles temperature range of -22°F to 230°F/-30°C to 110°C
- Can be mounted/dismantled 1000s of times



ETP-POWER®

- High radial load capacity
- Single screw actuation
- Extremely fast and frequent mounting/dismantling
- Radial screw positioning saves space along the shaft
- Small built-in dimensions
- Precise concentricity, even after many mountings
- Low runout, ≤0.03 mm
- Handles temperature range of 32°F to 158°F/0°C to 70°C
- Accurate positioning. No axial movement when mounting



ETP-HYLOC®

- Hydro-mechanical design
- Very high transmittable torque
- Transmittable torque can be varied by changing pressure
- Very high radial load capacity
- Fast and frequent mounting/dismantling
- Precise concentricity, even after many mountings
- Excellent runout, ≤0.02 mm
- Radial and axial connections
- Fine adjustment of the hub during mounting
- Can be mounted/dismantled 1000s of times

Company Overview
Quality / Capabilities
CD® Coupling
ServoClass® Coupling
Schmidt Offset Coupling
Control-Flex Coupling
Overload Safety
Posi-Lok® Keyless Bushing
ETP® Keyless Connection
Crown Gear Drives
Roh'Lix® Actuators
Adjustable Speed Drives & VRT™
Overhung Load Adaptors
Resources / Support

Crown Right-Angle Gear Drives Transmit Power with Quiet, Dependable Spiral Bevel Gears

- Compact, fully enclosed design ensures that internal gears remain supported and aligned, and reduces the risk of contamination
- Hardened spiral bevel gears promote smooth, quiet operation and long life
- Cast aluminum housings designed for maximum strength and heat dissipation
- Stainless Steel shafts and double-sealed ball-bearings in all units
- Two-way units available with 3/8", 1/2", 5/8", and 3/4" diameter shafts
- Three-way units available with 3/8", 1/2", 5/8", 3/4", and 1" diameter shafts
- Three-way Counter-Rotating units available with 3/8", 1/2", and 5/8" diameter shafts
- 1:1 and 2:1 Ratio models are available
- **IP65 Rated units with Nickel-Plated housings for corrosion resistance available**

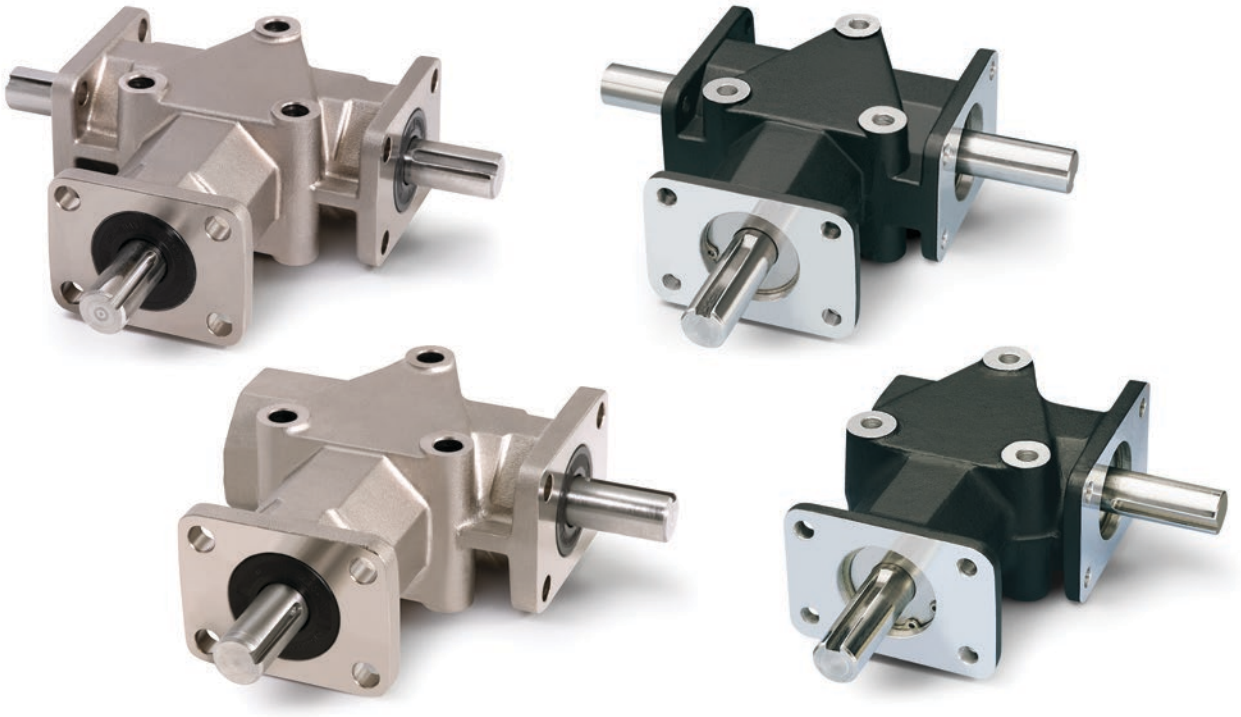

Proven Design

- Spiral Bevel Gears (AGMA Class 10)
- Quality Sealed Ball Bearings
- Stainless Steel Shafts
- Pre-Lubricated & Sealed for Life
- Maintenance Free
- Multiple Mounting Patterns
- Mount in Any Orientation
- Special Shaft Options Available

Crown Gear Drives

- 5-Sizes (3/8" to 1" Shafts)
- 2-Way or 3-Way Units
- 3-Way Counter-Rotating Units
- 1:1 or 2:1 (1:2) Ratio Options
- Lightweight Anodized or Nickel-Plated Aluminum Alloy Housings
- Standard or IP65-Rated
- ~~Fast~~ **Delivery**

Crown Right Angle Gear Drives

- Black anodized aluminum alloy housing
- Premium grade grease
- Stainless steel shafts
- Double sealed ball-bearings
- Maintenance-free
- ***Fast*** **Delivery**



IP65-Rated Crown Right Angle Gear Drives

- IP65 Certified for protection against water and dust ingress
- **Nickel-Plated** aluminum alloy housing for corrosion protection
- Shaft seals
- Food-grade grease (H1 rated) standard
- Stainless steel shafts
- Double sealed ball-bearings
- Maintenance-free
- ***Fast*** **Delivery**

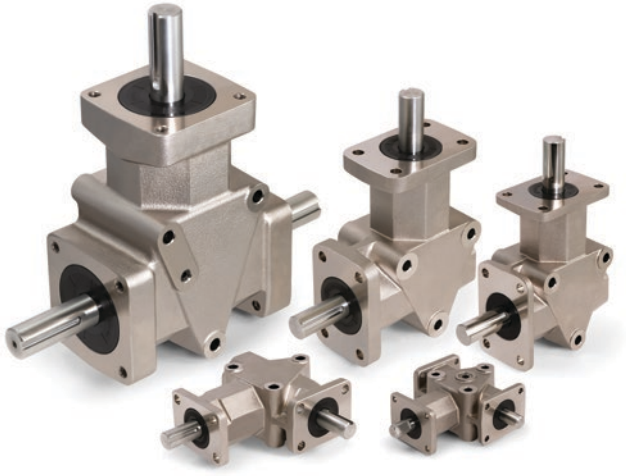

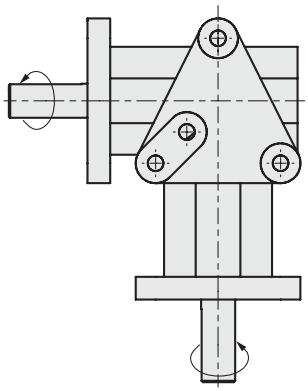

Two-Way Crown

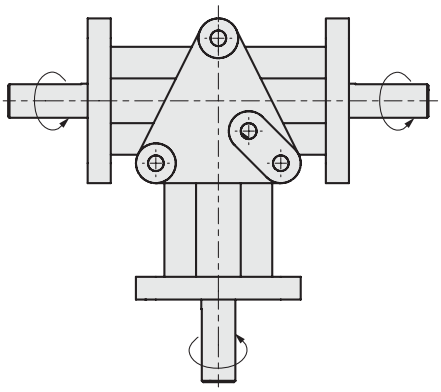

Three-Way Crown

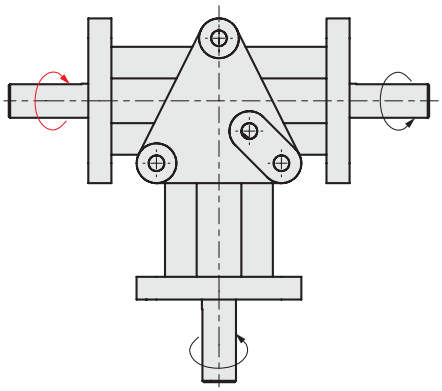

Counter-Rotating Crown

Company Overview
Quality / Capabilities
CD® Coupling
ServoClass® Coupling
Schmidt Offset Coupling
Control-Flex Coupling
Overload Safety
Posi-Lok® Keyless Bushing
ETP® Keyless Connection
Crown Gear Drives
Roh'Lix® Actuators
Adjustable Speed Drives & VRT™
Overhung Load Adaptors
Resources / Support

Roh'Lix® Linear Actuators Convert Rotary Motion to Linear Motion

- Five sizes with thrust capacities up to 200 pounds
- English and Metric shafts supported (up to 2 inches and 50 mm diameters)
- Leads (linear travel per revolution) ranging from 0.025 inches to 3-times the shaft diameter
- Easy thrust capacity adjustment allows for fine-tuning to individual application
- Built-in overload protection
- Easy installation and removal
- Can be used in horizontal or vertical applications
- Life expectancy from 2-million to over 100-million inches of linear travel with proper parameters
- Higher linear speeds possible than competitive solutions
- Units run dry – no lubrication required
- Bearings are lubricated and sealed for life
- Maintenance-Free operation in most applications
- Custom leads, shaft diameters, material, grease, block modifications and left-hand lead units available

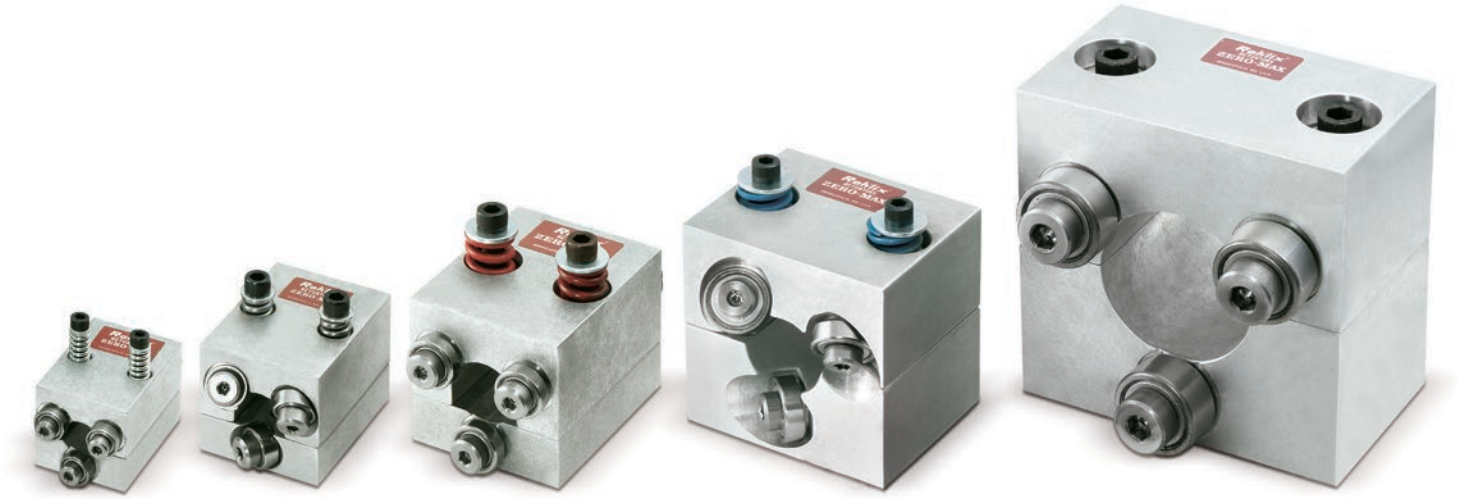

The Roh'Lix uses rolling element ball bearings that trace a helix pattern along the shaft, which produces a Rolling Helix, or **Roh'Lix for short**.

When the shaft is rotated, the bearings trace out an imaginary screw thread, causing the Roh'Lix to travel linearly along the shaft. The Roh'Lix Linear Actuator consists of six preloaded bearings that contact the shaft at a precise angle to set the linear distance traveled per shaft rotation.

The thrust capacity of the Roh'Lix is established by the spring force between the two block halves. The thrust force is adjusted by the thrust adjustment screws on the top of the block. When the thrust setting is exceeded, the Roh'Lix slips on the shaft until the source of the overload is corrected.

Operating Life

Tips for maximizing the operating life of Roh'Lix:

- Keep application thrust load to a smaller percentage of the unit's thrust rating
- Choose a higher lead (and reduced shaft rpm) to achieve the desired linear speed
- Minimize overloading conditions
- Minimize sideloads and twisting loads
- Support Roh'Lix block by separate linear bearing assembly, where possible

Easy Installation:
The Roh'Lix has a split-block for ease of installation and removal. The two block halves can be assembled around the shaft, eliminating the need for removal of pillow-block bearings, coupling, etc.

Shafting Requirement:
The Roh'Lix actuators require a smooth hardened-and-ground shaft. Hardness of 58 HRC or higher is recommended. Stainless steel and hollow shafting can be used in some instances. All shafting is customer supplied.

Critical Speed:
For any given shaft diameter, mounting method, and span length, there is a critical RPM speed that the application must stay below. Refer to the Roh'Lix catalog or contact the factory for further details and options that exist to increase these limits.

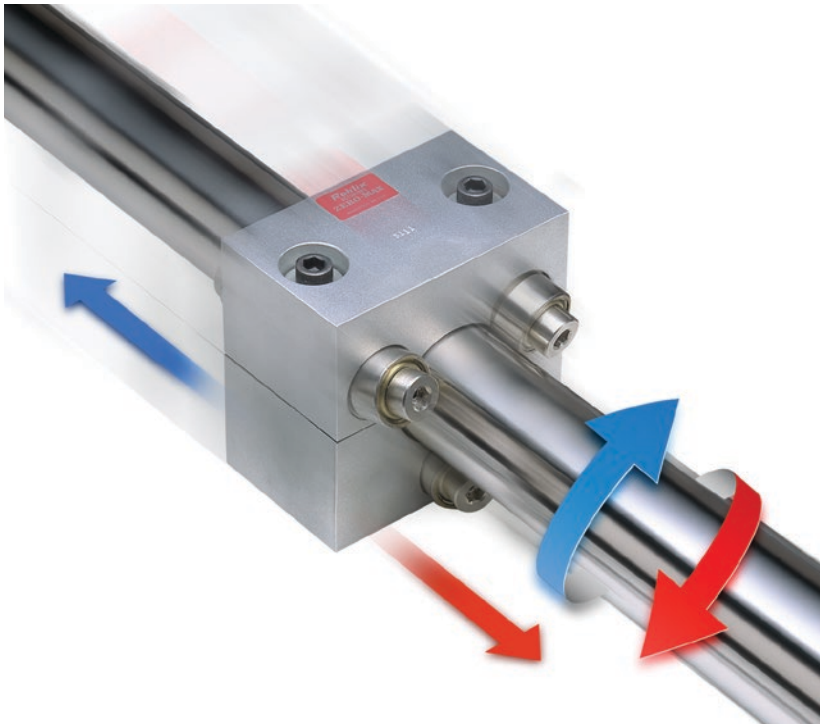

Phas-Lok Adjusting Hubs

Phas-Lok Adjusting Hubs Provide Easy and Accurate Phase Adjustment

The Phas-Lok Adjusting Hub is an economical, yet precise device. It provides an easy way to change the angular phase relationship of a drive component and the shaft. It is ideal for fine tuning timing adjustments, adjusting for chain elongation, and sprocket tooth wear.

The Zero-Max Phas-Lok Adjusting Hub provides an accurate, mechanical adjustment within a 24 degree range (±12°).

The Phas-Lok Adjusting Hub series is available in three standard sizes as well as the ability to customize one for your specific application.

- Three sizes of hubs (A, B, C)
- Standard series are bored to size for shaft diameters up to 2.5 inches or 65 mm
- "X" series are compatible with Browning bushings
- "QD" series are compatible with QD bushings
- Larger and custom units available



Company Overview
Quality / Capabilities
CD® Coupling
ServoClass® Coupling
Schmidt Offset Coupling
Control-Flex Coupling
Overload Safety
Posi-Lok® Keyless Bushing
ETP® Keyless Connection
Crown Gear Drives
Roh'Lix® Actuators
Adjustable Speed Drives & VRT™
Overhung Load Adaptors
Resources / Support

Adjustable Speed Drives

- Infinitely variable output speed range from 0 to approximately 1/4 of the input speed under full rated load
- Five sizes provide constant torque from 12 to 200 in-lbs
- Simple to install and operate
- Accepts input speeds up to 2,000 RPM
- Adjust output from 0 to 400 rpm with 1,800 RPM input
- Change speed anytime, frequently, continuously, or lock in at one setting
- Accurate speed holding
- Lubricated and sealed, maintenance-free
- Compact design can be used anywhere in application
- **Over 1 million Zero-Max Drives sold**

Unidirectional Drives



E Models
1, 2, 41 or 42
Torque Rating 12in. lbs.
Speed Range 0-400.
Normal Input 1/4-1/3 H.P.

JK Models
1, 2, 41 or 42
Torque Rating 25in. lbs.
Speed Range 0-400.
Normal Input 1/4-1/3 H.P.

Y Models
1, 2, 41, or 42
Torque Rating 60in. lbs.
Speed Range 0-400.
Normal Input 1/2 H.P.

QX Models
1, 2, 41 or 42
Torque Rating 100in. lbs.
Speed Range 0-400.
Normal Input 3/4 H.P.

ZX Models
1, 2, 41 or 42
Torque Rating 200in. lbs.
Speed Range 0-400.
Normal Input 1-1/2H.P.

Reversible Drives



E Model 3
Torque Rating 12in. lbs.
Speed Range 400-0-400.
Normal Input 1/4-1/3 H.P.

JK Model 3
Torque Rating 25in. lbs.
Speed Range 400-0-400.
Normal Input 1/4-1/3 H.P.

Gearhead



Right angle gearheads available for E and JK Models.
Right Angle - 4 Models
W1 4:1 W2 10:1
W3 20:1 W4 40:1

Motors



Many popular voltage, Hz, phase and enclosures are available for use with drive.
E Models 1, 2, 3
JK Models 1, 2 and 3

Configuration Options

- 5 Different Sizes
- Unidirectional and Reversible Drives
- Lever, Screw and Microdial Speed Controls
- Motor and Gearhead Options
- C-Face Motor Adapters Available
- Intermittent Drives (Sewing Applications)
- Tension Control Applications
- Special Lever Lengths
- Custom Models – Contact Factory



Screw Control



Standard Lever

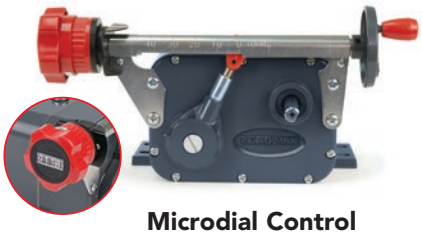

Microdial Control

To achieve the exact performance characteristics you desire, Zero-Max provides the following matching components for our Drives:

For Model E and JK Drives, a right angle gearhead and selection of motors are available.

For models Y, QX and ZX Drives, C-Flange adapters are available for connecting customer supplied motors to the drive you have selected.

Lever control is standard on all drives. Optional controls include: screw control, extended screw control, extended lever control, extended control shaft, microdial control, plus flatted-and-drilled control levers.

Direction of output rotation must be specified and is independent of input direction. Model numbers ending in "1" are CCW output, "2" are CW output and "3" are reversible output rotation.

Visit www.zero-max.com or download the Adjustable Speed Drives Catalog for full specifications, dimensions, and details.

Type	*Note: Shaft rotations are always referenced by viewing the end of that shaft*	Output Rotation	Preferred Input Rotation
E1, JK1, Y1, QX1, ZX1	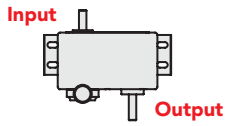	CCW	CW
E2, JK2, Y2, QX2, ZX2	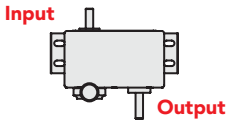	CW	CCW
E3, JK3, Y3	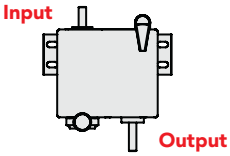	Both	CCW
E41, JK41, Y41, QX41, ZX41	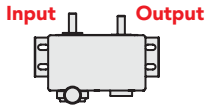	CCW	CCW
E42, JK42, Y42, QX42, ZX42	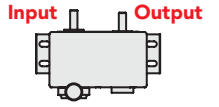	CW	CW

VRT™ - Variable Ratio Transmission

Zero-Max VRTs are a simple, efficient, and economical way to ensure **accurate and consistent application rates** for agricultural seeding and fertilizing equipment. VRTs are often ground-driven from the wheels of the implement and adjust to apply the proper amount of seed or fertilizer.

Our variable ratio drives have been used successfully in applications ranging from air seeders to plot seeders for decades. The **newly optimized design of the VRT** is available in different sizes, shaft arrangements, rotations, and controls. A customer-supplied remote control can also be added.

- Input Speeds up to 300 RPM
- Output Torque up to 300 in-lbs
- Output/Input Ratios of 0 to 0.25:1, standard
- Speed/Torque Expandable with Chain/Sprocket
- Variable Ratio or Fixed Ratio Operation
- Lever Control, Screw Control, or Control Shaft
- **Special Designs Available**

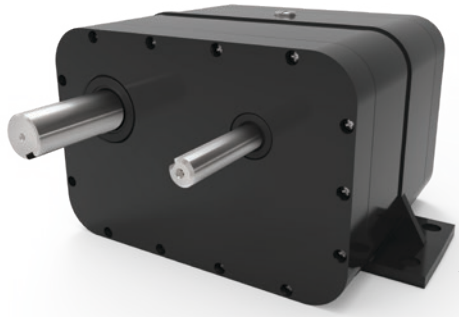

VRT-300-41

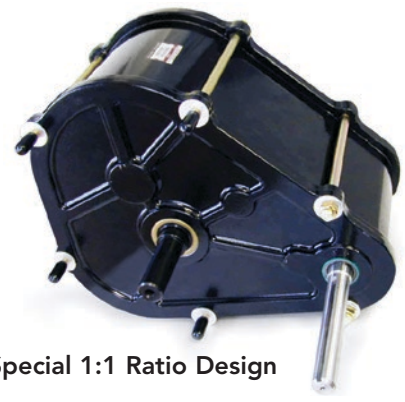

Special 1:1 Ratio Design

Download CAD Models – See Complete Size Range www.zero-max.com

OHLA®

Overhung Load Adaptors

- Eliminates premature motor or pump failure due to overhung loads
- Provides axial and radial load support
- Seals out dirt, grime, and other contaminants
- Prevents contamination of hydraulic fluid in harsh environments
- Provides a solid, permanent mounting surface
- Permits the removal of hydraulic motors for servicing without disturbing driven gears, pulleys or sprockets

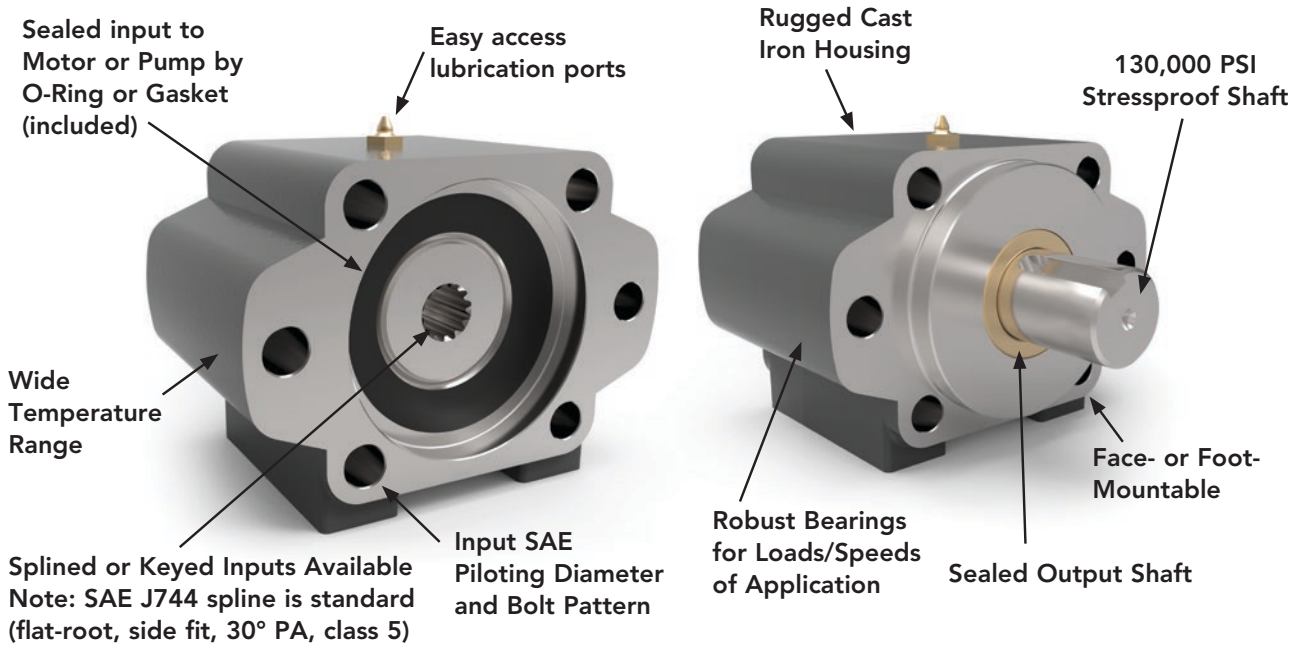

Zero-Max is a World-Leading Expert in Overhung Load Technology

The first complete line of SAE "A" through SAE "F" mount Overhung Load Adaptors (OHLA) was designed by Zero-Max. We set the industry standard with the OHLA design. Today, we provide immediate shipment of a wide selection of standard models from stock.

From the smallest Model 200 SAE "A" mount to the largest Model 1500 SAE "F" mount, OHLAs are constructed with the highest quality materials and processes. Standard OHLAs feature rugged housings of cast iron, shafts of 130,000 PSI stressproof steel, ball, tapered, or spherical roller bearings, many different shaft options, and attractively painted housings. All models may be either face or foot mounted.

We don't stop there. Any of our standard OHLAs can be modified to meet your specific application requirements. Our decades of expertise and experience with OHLAs make the options for your application endless. **Zero-Max OHLAs are fully customizable**.

Our OHLAs are field-proven to protect hydraulic motors and pumps, often on mobile equipment. They absorb the wear and stress from axial and radial loads to prevent breakdown and prolong the life of the motor/pump. They also seal out dirt and grime to prevent contamination of hydraulic fluid. OHLAs prevent costly downtime and are used daily in a wide variety of harsh applications including **fan drives and belt-driven systems**.

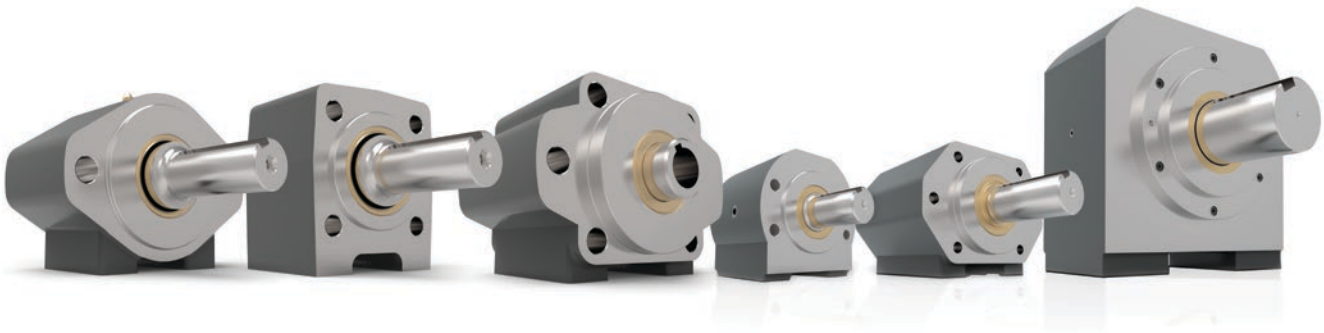

Complete Offering

- All SAE Sizes
- Bearing Options
- Foot & Face Mounting
- No Maintenance Operation Available
- Vertical & Horizontal Mounting Options
- Environmental Considerations
- Double-Male Shaft Options
- Thru-Bore Shaft Options
- Lubrication Options
- Heavy-Duty Models
- Material Choices
- **Fully Customizable**
- ~~**Fast** Delivery~~

Fully Customizable

Zero-Max prides itself on its customization ability and the OHLA product line is no exception. In fact, over half of the OHLAs we build each year are customized in some way.

We have the ability, expertise, and the willingness to customize an OHLA for your application with no minimum order quantity and fast turn-around. We can provide suggestions, drawings, and the calculations needed to ensure success.

Please see the following pages, our full OHLA catalog, visit our website, or call the Zero-Max factory to discuss how we can customize an Overhung Load Adaptor solution for you.

Overhung Load Adaptors Applications

Overhung Load Adaptors are used in a wide variety of **fan drive** and **belt driven** systems

Possible Applications

- Drilling / Fracking
- Agriculture
- Aggregate
- Forestry
- Marine
- Mining
- Military
- Conveying
- Construction
- Transportation
- Cleaning Systems
- Mobile Systems
- Industrial Machinery
- Many more...

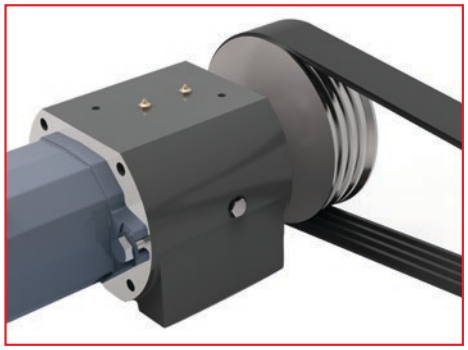

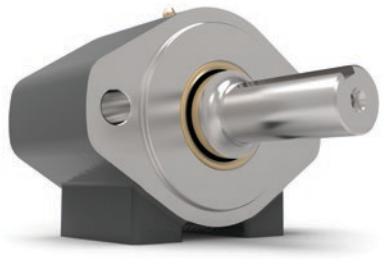

SAE A and A-A 2-Bolt Mounting

- Input Pilot Diameter 3.250"
- Deep Groove Ball Bearings
- May be either Face-mounted or Foot-mounted
- Provides a sturdy mounting base for the motor or pump
- **Extra-Duty series available**
- Supports heavy radial and axial loads - protecting the hydraulic motor or pump
- Reduces downtime and maintenance costs
- Protects pump or motor shaft seal from harmful contaminants

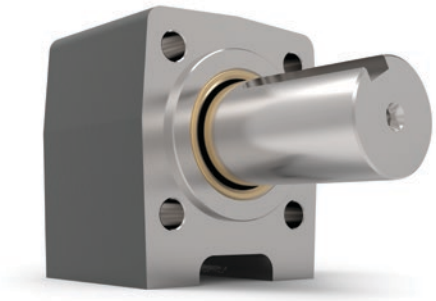

Non-SAE 4-Bolt Mounting

- Input Pilot Diameter 1.750"
- Deep Groove Ball Bearings
- May be either Face-mounted or Foot-mounted
- Provides a sturdy mounting base for the motor or pump
- Supports heavy radial and axial loads - protecting the hydraulic motor or pump
- Reduces downtime and maintenance costs
- Protects pump or motor shaft seal from harmful contaminants



SAE A 2-Bolt or 4-Bolt Magneto Mounting

- Input Pilot Diameter 3.250"
- Heavy Duty Tapered Roller Bearings
- May be either Face-mounted or Foot-mounted
- Provides a sturdy mounting base for the motor or pump
- Supports heavy radial and axial loads - protecting the hydraulic motor or pump
- Reduces downtime and maintenance costs
- Protects pump or motor shaft seal from harmful contaminants

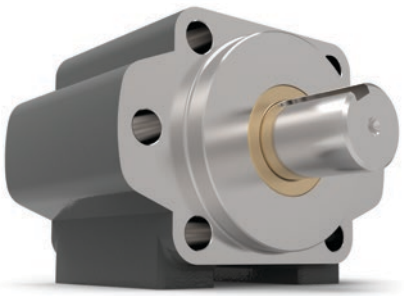

SAE B and B-B 2-Bolt or 4-Bolt Mounting

- Input Pilot Diameter 4.000"
- Heavy Duty Tapered Roller Bearings
- May be either Face-mounted or Foot-mounted
- Provides a sturdy mounting base for the motor or pump
- **Extra-Duty series available**
- Supports heavy radial and axial loads - protecting the hydraulic motor or pump
- Reduces downtime and maintenance costs
- Protects pump or motor shaft seal from harmful contaminants



SAE C and C-C 2-Bolt or 4-Bolt Mounting

- Input Pilot Diameter 5.000"
- Heavy Duty Tapered Roller Bearings
- May be either Face-mounted or Foot-mounted
- Provides a sturdy mounting base for the motor or pump
- **Extra-Duty series available**
- Supports heavy radial and axial loads - protecting the hydraulic motor or pump
- Reduces downtime and maintenance costs
- Protects pump or motor shaft seal from harmful contaminants



SAE D 2-Bolt or 4-Bolt Mounting

- Input Pilot Diameter 6.000"
- Extra Heavy Duty Tapered Roller Bearings
- May be either Face-mounted or Foot-mounted
- Provides a sturdy mounting base for the motor or pump
- Supports heavy radial and axial loads - protecting the hydraulic motor or pump
- Reduces downtime and maintenance costs
- Protects pump or motor shaft seal from harmful contaminants

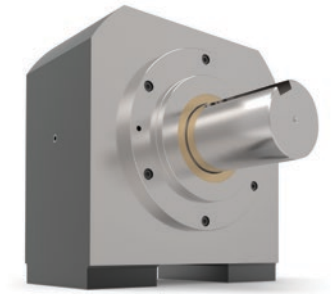

SAE E 4-Bolt Mounting

- Input Pilot Diameter 6.500"
- Extra Heavy Duty Spherical Roller Bearings
- May be either Face-mounted or Foot-mounted
- Provides a sturdy mounting base for the motor or pump
- Supports heavy radial and axial loads - protecting the hydraulic motor or pump
- Reduces downtime and maintenance costs
- Protects pump or motor shaft seal from harmful contaminants

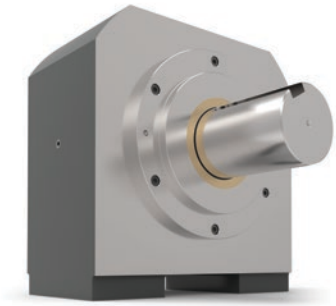

SAE F 4-Bolt Mounting

- Input Pilot Diameter 7.000"
- Extra Heavy Duty Spherical Roller Bearings
- May be either Face-mounted or Foot-mounted
- Provides a sturdy mounting base for the motor or pump
- Supports heavy radial and axial loads - protecting the hydraulic motor or pump
- Reduces downtime and maintenance costs
- Protects pump or motor shaft seal from harmful contaminants

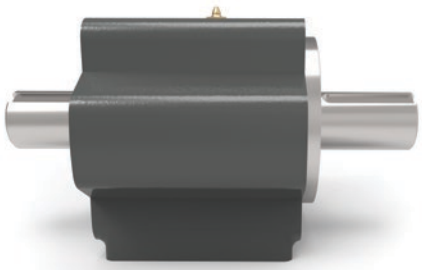

Double-Male Face or Foot Mounting

- Double-male shaft configuration with seals at each end
- 2-bolt or 4-bolt mounting pattern
- Heavy Duty Tapered Roller Bearings
- May be either Face-mounted or Foot-mounted
- Provides sturdy mounting base
- Supports heavy radial and axial loads
- Reduces downtime and maintenance costs

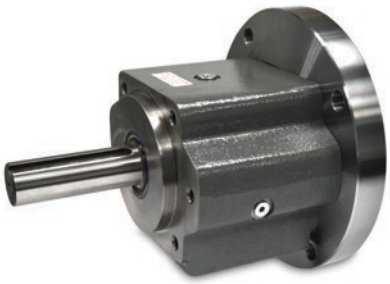

Custom Designs

- Any Size / Any Quantity
- Housing Modifications
- Shaft Modifications
- Mounting Features
- Custom Seals
- Bearing Modifications
- Special Lubrication
- Special Finishes
- Built-In Features
- Special Requests

Company Overview
Quality / Capabilities
CD® Coupling
ServoClass® Coupling
Schmidt Offset Coupling
Control-Flex Coupling
Overload Safety
Posi-Lok® Keyless Bushing
ETP® Keyless Connection
Crown Gear Drives
Roh'Lix® Actuators
Adjustable Speed Drives & VRT™
Overhung Load Adaptors
Resources / Support

Some of the Special Features We Can Add:

- Double-Male Shafts
- Drilled-and-Tapped Shaft End
- External Threaded Shaft-End
- Stepped Shoulder on Shaft for Retention / Positioning of Mounted Component
- Face Seals
- SAE or NPT Ports
- Pre-Greased Units
- Permanently-Lubricated Units
- Breather Plugs
- Add-on Seal Carriers
- QPQ Finish for Corrosion Protection / Seal Life
- Tapered Output Shafts
- Stainless Steel Shafts
- Nickel-Plated Housings
- Custom Output Seals
- Tapped Mounting Holes
- Transition Between SAE Mounting Sizes
- Heat-Treated Shafts
- **Other Features - as Needed - Please Inquire...**



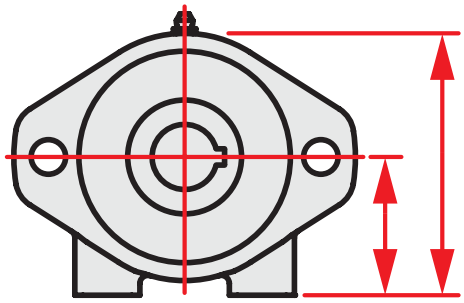

Factory Assistance

- Application Expertise
- Bearing Lifetime Calculations
- Shaft Strength Calculations
- Lubrication Recommendations
- Environmental Considerations
- Practical Advice

Dimensional Criteria

- Standard unit may be selected for fitting-up to the hydraulic motor or pump dimensions
- CAD files may be downloaded from website to check fit
- Product drawings available from website and catalog
- Modifications to standard dimensions are available as needed

Performance Criteria

Information needed to analyze application includes:

- Horsepower
- Speed (RPM)
- Load Details
- Mounting Orientation
- Motor / Pump Details
- Operating Environment Details

Call a Zero-Max technical sales representative now. There's a model and size OHLA to handle every design need – or we'll engineer a special one just for you. ***1.800.533.1731***

Zero-Max Configurable 3D CAD Downloads
www.zero-max.com

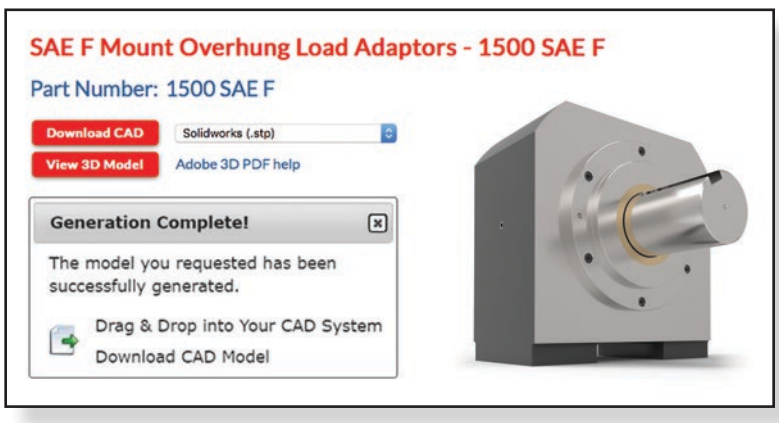



See Full OHLA Catalog for more details and modification examples

Resources

Zero-Max is committed to providing best in class service and solutions. That includes readily available and easily accessible resources for our customers. In addition to this overview catalog, Zero-Max publishes detailed catalogs and specifications for each of our product lines, installation and maintenance instructions, 3D models to streamline your design, and a user-friendly website that gives you access to all of this information 24/7.



Website

- Product Information and Catalogs
- Product Specifications and Selection
- Product Instructions
- Industry and Application Details
- Company Details
- Downloads and RFQs
- 3D CAD Models



Product Catalogs

- Product Details
- Specifications
- Drawings
- Selection Criteria
- Application Examples
- Part Number Details



Product Instruction Sheets

- Installation
- Maintenance
- Replacement Parts
- Adjustments



CAD Model Downloads

- All Product Lines
- Fully Configurable (Bore size, Keyway, etc.)
- Multiple File Format Options (3D and 2D)
- View on Screen
- Download CAD Files

Contact / Support

What makes a company great? It is having great people. Zero-Max has established a goal to attract and retain highly motivated and talented people. It is those people who make our company an effective and responsive supplier to some of the greatest customers in the world. If we can be of assistance, we have a number of ways you can get in touch with us:

Address:
Zero-Max, Inc.
13200 Sixth Avenue North
Plymouth, MN 55441

Phone:
800.533.1731
763.546.4300

Fax:
763.546.8260

Email:
sales@zero-max.com

Website:
www.zero-max.com

Services Available

- Customer Service & Sales
- Product Selection
- Technical Product Support
- Application Assistance
- Engineering Support
- Local Sales Representatives
- Worldwide Partners
- **Custom Designs**



Company Overview
Quality / Capabilities
CD® Coupling
ServoClass® Coupling
Schmidt Offset Coupling
Control-Flex Coupling
Overload Safety
Posi-Lok® Keyless Bushing
ETP® Keyless Connection
Crown Gear Drives
Roh'Lix® Actuators
Adjustable Speed Drives & VRT™
Overhung Load Adaptors
Resources / Support

Precise. Reliable. Robust. Available.



CD® Couplings



ServoClass® Couplings



Schmidt Offset Couplings

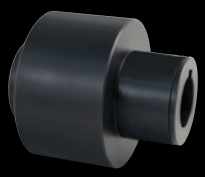

Overload Safety Couplings



Control-Flex Couplings



Keyless Shaft Locking Devices



Crown Gear Drives



Adjustable Speed Drives



Roh'Lix® Linear Actuators

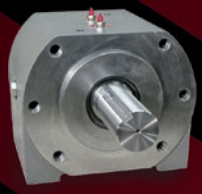

OHLA® Overhung Load Adaptors

Warranty. Zero-Max, Inc. the manufacturer, warrants that for a period of 12 months from date of shipment it will repair, or at its option, replace any new apparatus which proves defective in material or workmanship, or which does not conform to applicable drawings and specifications approved by the manufacturer. All repairs and replacements shall be F.O.B. factory. All claims must be made in writing to the manufacturer. ● In no event and under no circumstances shall manufacturer be liable for (a) damages in shipment; (b) failures or damages due to misuse, abuse, improper installation or abnormal conditions of temperature, dirt, water or corrosives; (c) failures due to operation, intentional or otherwise, above rated capacities, and (d) non-authorized expenses for removal, inspection, transportation, repair or rework. Nor shall manufacturer ever be liable for consequential and incidental damages, or in any amount greater than the purchase price of the apparatus. ● Zero Max, Inc. reserves the right to discontinue models or to change specifications at any time without notice. No discontinuance or change shall create any liability on the part of Zero-Max, Inc. in respect to its products in the hands of customers or products on order not incorporating such changes even though delivered after any such change. ● This warranty is in LIEU OF ALL OTHER WARRANTIES, EXPRESS OR IMPLIED, INCLUDING (BUT NOT LIMITED TO) ANY IMPLIED WARRANTIES OF MERCHANTABILITY OR FITNESS FOR A PARTICULAR PURPOSE. THE TERMS OF THIS WARRANTY CONSTITUTE ALL BUYER'S OR USER'S SOLE AND EXCLUSIVE REMEDY, AND ARE IN LIEU OF ANY RIGHT TO RECOVER FOR NEGLIGENCE, BREACH OF WARRANTY, STRICT TORT LIABILITY OR UPON ANY OTHER THEORY. Any legal proceedings arising out of the sale or use of this apparatus must be commenced within 18 months of the date of purchase. ● CAUTION: Rotating equipment must be guarded. Also refer to OSHA specifications and recommendations. ● Zero-Max®, CD®, ETP®, ServoClass®, Torq-Tender®, Posi-Lok®, Roh'Lix®, and OHLA® are registered trademarks of Zero-Max, Inc. In U.S.A.

©Zero-Max, Inc., All Rights Reserved
Printed in U.S.A., Rev 1.05S

ZERO-MAX®

13200 Sixth Avenue North, Plymouth, Minnesota 55441-5509
Phone 800.533.1731 763.546.4300 FAX 763.546.8260

zero-max.com