

DOUBLE–INTERLOCK Pillow Block – Inch

2-BOLT BASE

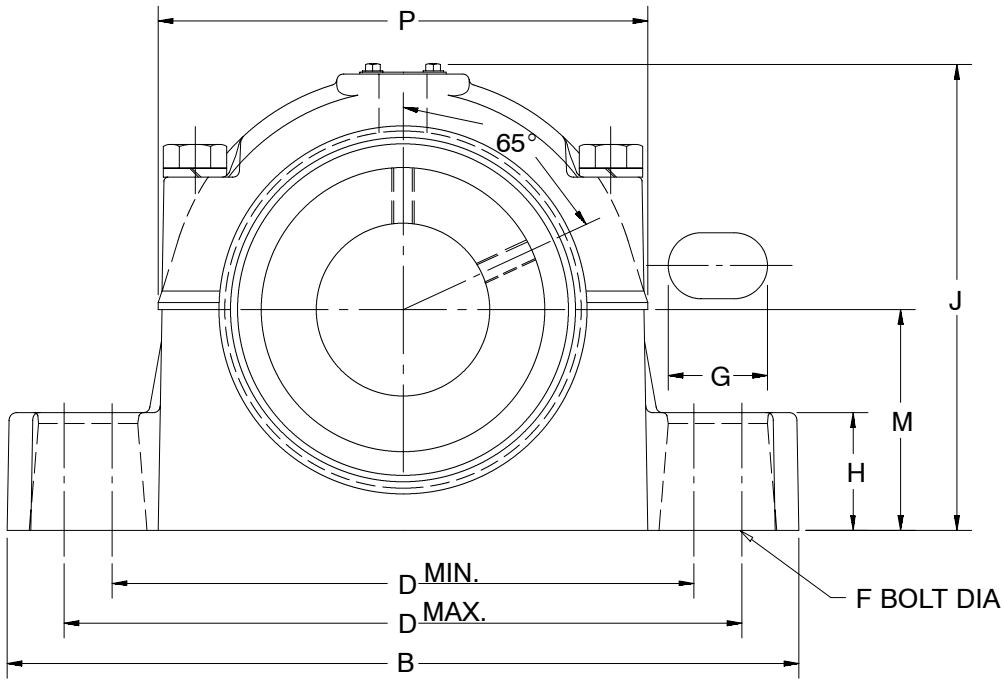

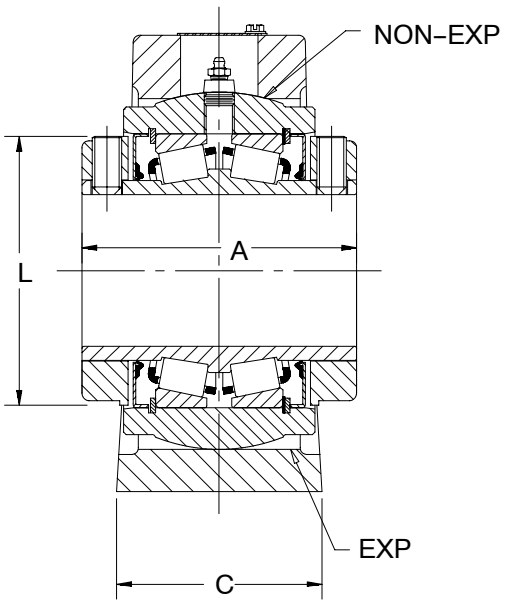

1-$^{3}/_{16}$″ THRU 3″ CONSTRUCTION

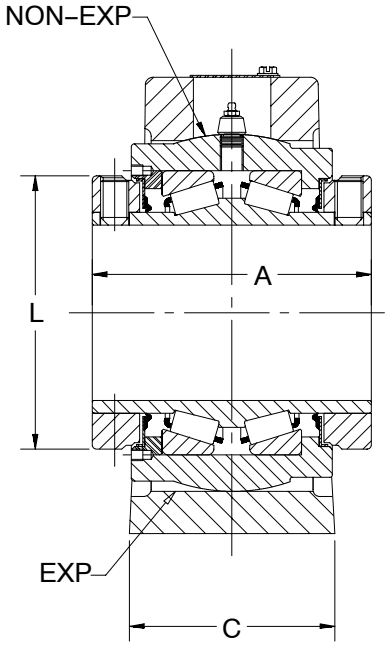

3-$^{3}/_{16}$″ THRU 3-$^{1}/_{2}$″ CONSTRUCTION

ENGINEERING/TECHNICAL PAGE B5–17	EASY SELECTION PAGE B5–15	FEATURES/BENEFITS PAGE B5–2	SPECIFICATIONS PAGE B5–7

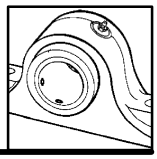

DOUBLE–INTERLOCK Pillow Block – Inch

2-BOLT BASE

GRAY IRON NON-EXPANSION*					
SHAFT SIZE INCHES#	SHAFT SIZE SYMBOL	PILLOW BLOCK P/N	HOUSING P/N	UNIT P/N	PIL. BLK. WT.,APRX LBS
1-1/4	104	**023329**	**056130**	**023508**	9
1-3/8	106	**023330**	**056132**	**023509**	11
1-7/16	107	**023331**	**056132**	**023510**	11
1-1/2	108	**023332**	**056134**	**023511**	15
1-5/8	110	**023333**	**056134**	**023512**	15
1-11/16	111	**023334**	**056134**	**023513**	15
1-3/4	112	**023335**	**056136**	**023514**	18
1-15/16	115	**023337**	**056136**	**023516**	17
2	200	**023338**	**056136**	**023517**	17
2-3/16	203	**023339**	**056138**	**023518**	25
2-1/4	204	**023340**	**056140**	**023519**	29
2-7/16	207	**023341**	**056140**	**023520**	26
2-1/2	208	**023342**	**056140**	**023521**	26
2-11/16	211	**023343**	**056142**	**023522**	41
2-3/4	212	**023344**	**056142**	**023523**	41
2-15/16	215	**023345**	**056142**	**023524**	40
3	300	**023346**	**056142**	**023525**	40
3-3/16	303	**023347**	**056144**	**023526**	67
3-7/16	307	**023349**	**056144**	**023528**	66
3-1/2	308	**023350**	**056144**	**023529**	66

Description = P2b-di-207r For 2-7/16″ Size
# Consult DODGE For Sizes Not Listed.
* Furnished Unless Otherwise Specified

GRAY IRON EXPANSION					
SHAFT SIZE INCHES#	SHAFT SIZE SYMBOL	PILLOW BLOCK P/N	HOUSING P/N	UNIT P/N	PIL. BLK. WT.,APRX LBS
1-1/4	104	**023376**	**056100**	**023508**	9
1-3/8	106	**023377**	**056102**	**023509**	11
1-7/16	107	**023378**	**056102**	**023510**	11
1-1/2	108	**023379**	**056104**	**023511**	15
1-5/8	110	**023380**	**056104**	**023512**	15
1-11/16	111	**023381**	**056104**	**023513**	15
1-3/4	112	**023382**	**056106**	**023514**	18
1-15/16	115	**023384**	**056106**	**023516**	17
2	200	**023385**	**056106**	**023517**	17
2-3/16	203	**023386**	**056108**	**023518**	22
2-1/4	204	**023387**	**056110**	**023519**	29
2-7/16	207	**023388**	**056110**	**023520**	26
2-1/2	208	**023389**	**056110**	**023521**	26
2-11/16	211	**023390**	**056112**	**023522**	42
2-3/4	212	**023391**	**056112**	**023523**	42
2-15/16	215	**023392**	**056112**	**023524**	41
3	300	**023393**	**056112**	**023525**	41
3-3/16	303	**023394**	**056114**	**023526**	69
3-7/16	307	**023396**	**056114**	**023528**	68
3-1/2	308	**023397**	**056114**	**023529**	68

Description = P2b-di-207re For 2-7/16″ Size
# Consult DODGE For Sizes Not Listed.

SHAFT SIZE INCHES	A	B	C	D		F BOLT DIA.	G	H	J	L	M	P	EXP*
				MIN.	MAX.								
1-1/4	2-3/4	7-1/2	1-7/8	6	6-3/8	3/8	43/64	1	4-17/32	2-1/4	2-1/8	5	3/32
1-3/8 1-7/16	3	8	2-11/64	6-1/4	6-5/8	1/2	3/4	1-1/4	5-15/64	2-3/4	2-3/8	5-33/64	3/32
1-1/2 1-5/8 1-11/16	3-3/8	9	2-3/8	6-7/8	7-5/8	1/2	1	1-3/8	5-3/4	3-3/16	2-5/8	5-15/16	3/32
1-3/4 1-15/16 2	3-1/2	10	2-17/32	7-3/8	8-7/16	5/8	1-19/64	1-1/2	6-17/64	3-7/16	2-7/8	6-23/64	9/32
2-3/16	3-3/4	11	2-21/32	8-3/4	9-1/4	5/8	1-21/64	1-1/2	6-33/34	3-3/4	3	6-16/64	9/32
2-1/4 2-7/16 2-1/2	4	12	2-13/16	9-17/64	10-1/4	5/8	1-17/64	1-3/4	7-1/32	4-1/16	3-1/4	7-3/8	9/32
2-11/16 2-3/4 2-15/16 3	4-1/2	13-7/16	2-15/16	9-7/8	11-1/2	3/4	1-11/16	2	7-59/64	4-23/32	3-3/4	8-5/16	9/32
3-3/16 3-7/16 3-1/2	5	16	3-7/16	12-13/16	13-13/16	7/8	1-1/2	2-1/4	9-27/64	5-7/16	4-1/2	10-3/32	9/32

*EXP - Total Expansion Divided Equally On Both Sides Of Bearing (Expansion Bearings Only)

Dowel Hole Locations For Precision Positioning – See Page B9–30 – B9–31