Sleeve Bearings–SOLIDLUBE–Metric

20MM THRU 50MM SOLIDLUBE LT 2-BOLT FLANGE BEARING-METRIC

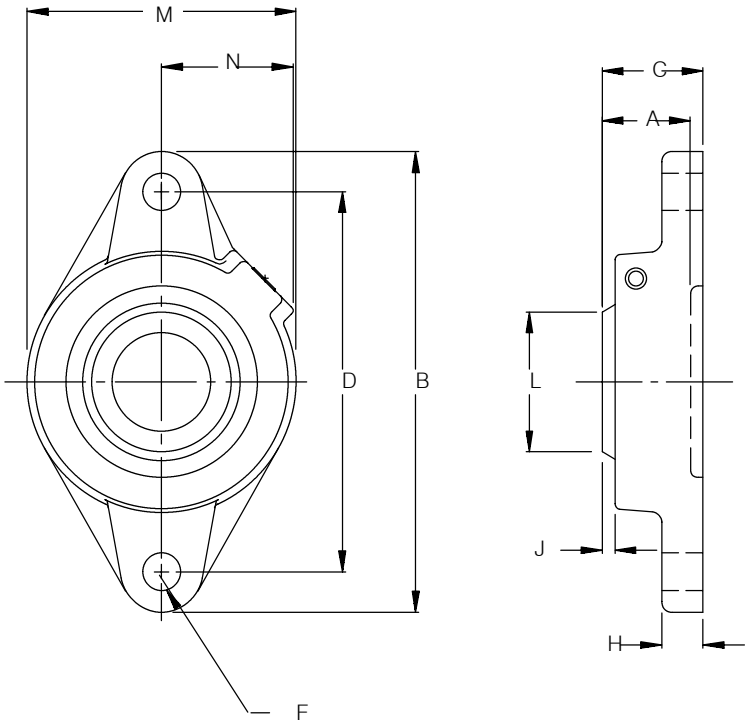

20MM THRU 75MM SOLIDLUBE LT 4-BOLT FLANGE BEARING-METRIC

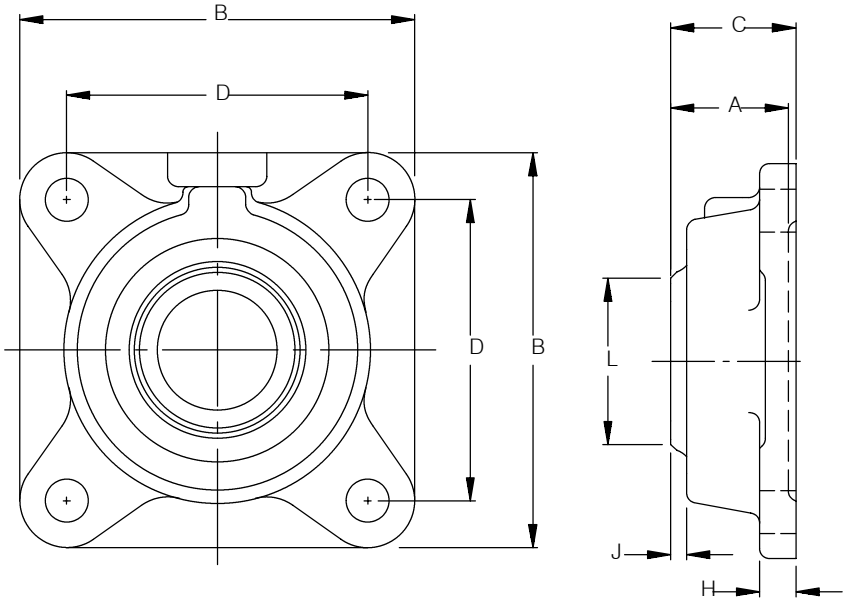

FEATURES/BENEFITS PAGE B11–2	HOW TO ORDER/NOMENCLATURE PAGE B11–4	SELECTION PAGE B11–8	SOLIDLUBE INCH PAGES B11–21 & B11–23

Sleeve Bearings–SOLIDLUBE–Metric

20MM THRU 50MM SOLIDLUBE LT 2-BOLT FLANGE BEARING-METRIC

Series	Shaft Size	700 Series			1000 Series		
		Part Number	Description	Wt. (Kg)	Part Number	Description	Wt. (Kg)
204	20mm	**034260**	F2B-LT7-20M	.54	**034266**	F2B-LT10-20M	.54
205	25mm	**034261**	F2B-LT7-25M	.68	**034267**	F2B-LT10-25M	.68
206	30mm	**034262**	F2B-LT7-30M	.95	**034268**	F2B-LT10-30M	.95
207	35mm	**034263**	F2B-LT7-35M	1.50	**034269**	F2B-LT10-35M	1.50
209	40mm	**034218**	F2B-LT7-40M	2.22	**034270**	F2B-LT10-40M	2.22
	45mm	**034264**	F2B-LT7-45M	2.13	**034271**	F2B-LT10-45M	2.13
210	50mm	**034265**	F2B-LT7-50M	2.36	**034272**	F2B-LT10-50M	2.36

Series	Shaft Size	A	B	C	D	F		H	J	L	M	N
						mm	Inch					
204	20mm	23.0	122.2	28.6	89.7	10.0	3/8	12.7	4.0	34.9	60.3	38.1
205	25mm	25.0	123.8	28.2	98.8	10.0	7/16	12.7	4.0	39.7	69.9	36.5
206	30mm	28.2	141.3	31.0	116.7	10.0	7/16	12.7	4.0	46.0	79.4	39.7
207	35mm	31.0	155.6	34.9	130.2	12.0	1/2	14.3	4.0	54.0	95.3	46.8
209	40mm 45mm	34.1	179.4	40.5	148.4	12.0	1/2	15.9	4.8	65.1	111.1	48.4
210	50mm	35.7	188.9	42.1	157.2	12.0	1/2	15.9	4.8	71.4	108.7	51.6

All Dimensions Are in Millimeters Unless Otherwise Specified.

20MM THRU 75MM SOLIDLUBE LT 4-BOLT FLANGE BEARING-METRIC

Series	Shaft Size	700 Series			1000 Series		
		Part Number	Description	Wt. (Kg)	Part Number	Description	Wt. (Kg)
204	20mm	**034273**	F4B-LT7-20M	.68	**034283**	F4B-LT10-20M	.60
205	25mm	**034274**	F4B-LT7-25M	.91	**034284**	F4B-LT10-25M	.91
206	30mm	**034275**	F4B-LT7-30M	1.27	**034285**	F4B-LT10-30M	1.27
207	35mm	**034276**	F4B-LT7-35M	1.81	**034286**	F4B-LT10-35M	1.81
209	40mm	**034277**	F4B-LT7-40M	2.63	**034287**	F4B-LT10-40M	2.63
	45mm	**034278**	F4B-LT7-45M	2.54	**034288**	F4B-LT10-45M	2.54
210	50mm	**034279**	F4B-LT7-50M	3.00	**034289**	F4B-LT10-50M	3.00
212	60mm	**034280**	F4B-LT7-60M	5.00	**034290**	F4B-LT10-60M	5.00
215	70mm	**034281**	F4B-LT7-70M	8.16	**034291**	F4B-LT10-70M	8.16
	75mm	**034282**	F4B-LT7-75M	8.03	**034292**	F4B-LT10-75M	8.03

Series	Shaft Size	A	B	C	D	F Bolt Dia.		H	J	L
						mm	Inch			
204	20mm	23.0	85.7	28.6	63.5	10	3/8	11.1	4.0	34.9
205	25mm	25.0	95.2	28.2	69.9	10	7/16	12.7	4.8	39.7
206	30mm	24.6	108.0	31.0	82.6	10	7/16	12.7	4.0	46.0
207	35mm	31.0	120.7	34.9	92.1	12	1/2	14.3	4.0	54.0
209	40mm 45mm	34.1	136.5	40.5	104.8	12	1/2	15.9	5.2	65.1
210	50mm	35.7	142.9	42.1	111.1	12	1/2	15.9	5.6	71.4
212	60mm	37.3	177.8	50.0	142.9	16	5/8	17.5	4.4	88.9
215	70mm 75mm	69.1	196.9	69.9	152.4	18	3/4	25.4	13.5	100.0

All Dimensions Are in Millimeters Unless Otherwise Specified.

FEATURES/BENEFITS PAGE B11–2	HOW TO ORDER/ NOMENCLATURE PAGE B11–4	SELECTION PAGE B11–8	SOLIDLUBE INCH PAGES B11–21 & B11–23