SELECTION/DIMENSIONS

E-Z KLEEN Mounted Bearings

SCEZ NORMAL DUTY STAINLESS STEEL HOUSED PILLOW BLOCKS

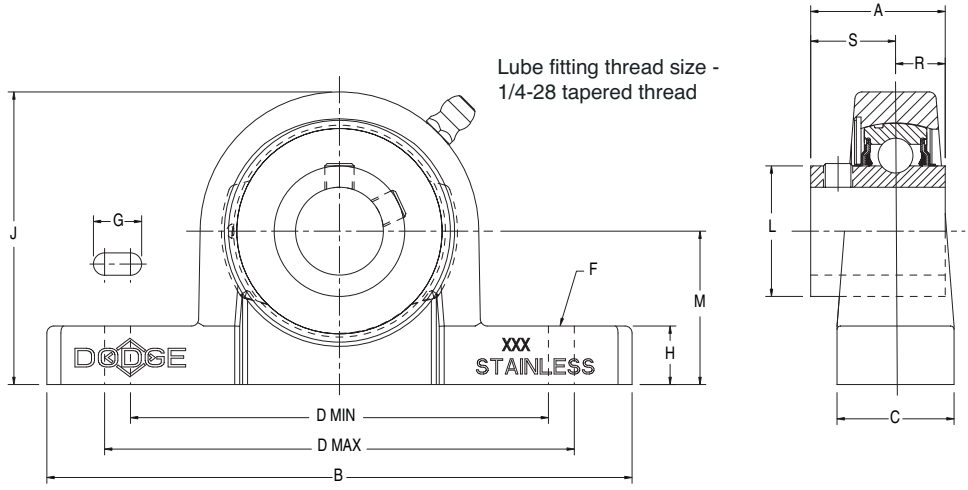

Series	Shaft Size	With Corrosion Resistant Insert		Standard Insert with Flingers	
		Part No.	Description	Part No.	Description
204	1/2	@	P2B-SCEZ-008L-SHCR	@	P2B-SCEZ-008L-SH
	5/8	@	P2B-SCEZ-010L-SHCR	@	P2B-SCEZ-010L-SH
	3/4	**127670**	P2B-SCEZ-012-SHCR	**059870**	P2B-SCEZ-012-SH
	20mm	***127697***	*P2B-SCEZ-20M-SHCR*	@	*P2B-SCEZ-20M-SH*
205	7/8	**056553**	P2B-SCEZ-014-SHCR*	**049996**	P2B-SCEZ-014-SH
	15/16	@	P2B-SCEZ-015-SHCR*	@	P2B-SCEZ-015-SH
	1	**127671**	P2B-SCEZ-100-SHCR	**056796**	P2B-SCEZ-100-SH
	25mm	***127698***	*P2B-SCEZ-25M-SHCR*	@	*P2B-SCEZ-25M-SH*
206	1-1/8	@	P2B-SCEZ-102-SHCR*	**056548**	P2B-SCEZ-102-SH
	1-3/16	**127672**	P2B-SCEZ-103-SHCR	**056797**	P2B-SCEZ-103-SH
	1-1/4	**127674**	P2B-SCEZ-104S-SHCR	@	P2B-SCEZ-104S-SH
	30mm	@	*P2B-SCEZ-30M-SHCR*	@	*P2B-SCEZ-30M-SH*
206 (SCU)	1-1/8	@	P2B-SCUEZ-102-SHCR*	@	P2B-SCUEZ-102-SH
	1-3/16	**127673**	P2B-SCUEZ-103-SHCR	@	P2B-SCUEZ-103-SH
	1-1/4	**127675**	P2B-SCUEZ-104S-SHCR	@	P2B-SCUEZ-104S-SH
	30mm	***127699***	*P2B-SCUEZ-30M-SHCR*	@	*P2B-SCUEZ-30M-SH*

@ Assembled to order

*20 piece minimum

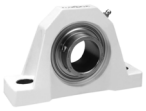

E-Z KLEEN Mounted Bearings
SCEZ NORMAL DUTY STAINLESS STEEL HOUSED PILLOW BLOCKS

Series	Shaft Size	Weight lbs / kg	A	B	C	D min.	D max.	F Bolt Dia.	G	H	J	L	M	R	S
204	1/2	1.39	1-5/32	5	1	3-3/8	4-3/16	3/8	27/32	1/2	2-1/2	1-1/8	1-5/16	27/64	47/64
	5/8	1.35													
	3/4	1.31													
	20mm	*0.59*	*29.4*	*127.0*	*25.4*	*85.7*	*106.4*	*M10*	*21.4*	*12.7*	*63.5*	*28.6*	*33.3*	*10.7*	*18.7*
205	7/8	1.65	1-3/16	5-1/2	1-1/8	3-11/16	4-1/2	3/8	27/32	17/32	2-23/32	1-21/64	1-7/16	27/64	49/64
	15/16	1.62													
	1	1.59													
	25mm	*0.73*	*30.2*	*139.7*	*28.6*	*93.7*	*114.3*	*M10*	*21.4*	*13.5*	*69.1*	*33.7*	*36.5*	*10.7*	*19.4*
206	1-1/8	2.37	1-25/64	6-1/4	1-1/4	4-17/64	5	1/2	15/16	17/32	3-1/8	1-37/64	1-5/8	31/64	29/32
	1-3/16	2.33													
	1-1/4	2.29													
	30mm	*1.06*	*35.3*	*158.8*	*31.8*	*108.3*	*127.0*	*M12*	*23.8*	*13.5*	*79.4*	*40.1*	*41.3*	*12.3*	*23.0*
206 (SCU)	1-1/8	2.48	1-25/64	6-1/4	1-1/4	4-17/64	5	1/2	15/16	19/32	3-3/16	1-37/64	1-11/16	31/64	29/32
	1-3/16	2.44													
	1-1/4	2.39													
	30mm	*1.11*	*35.3*	*158.8*	*31.8*	*108.3*	*127.0*	*M12*	*23.8*	*15.1*	*81.0*	*40.1*	*42.9*	*12.3*	*23.0*

SELECTION/DIMENSIONS

E-Z KLEEN Mounted Bearings

SCEZ NORMAL DUTY STAINLESS STEEL HOUSED PILLOW BLOCKS

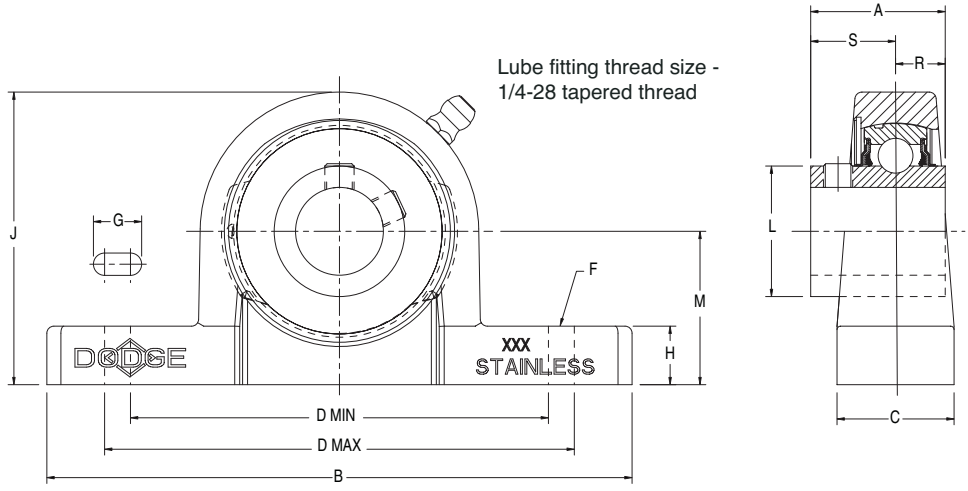

Series	Shaft Size	With Corrosion Resistant Insert		Standard Insert with Flingers	
		Part No.	Description	Part No.	Description
207	1-1/4	**127676**	P2B-SCEZ-104-SHCR	**059798**	P2B-SCEZ-104-SH
	1-3/8	@	P2B-SCEZ-106-SHCR*	**056525**	P2B-SCEZ-106-SH
	1-7/16	**127677**	P2B-SCEZ-107-SHCR	**059799**	P2B-SCEZ-107-SH
	35mm	***127700***	*P2B-SCEZ-35M-SHCR*	@	*P2B-SCEZ-35M-SH*
208	1-1/2	**127678**	P2B-SCEZ-108-SHCR	**056565**	P2B-SCEZ-108-SH
	1-5/8	@	P2B-SCEZ-110-SHCR*	**062874**	P2B-SCEZ-110-SH
	40mm	@	*P2B-SCEZ-40M-SHCR*	@	*P2B-SCEZ-40M-SH*
208 (SCB)	1-1/2	**127679**	P2B-SCBEZ-108-SHCR	@	P2B-SCBEZ-108-SH
	40mm	***127701***	*P2B-SCBEZ-40M-SHCR*	@	*P2B-SCBEZ-40M-SH*
210	1-11/16	@	P2B-SCMEZ-111-SHCR	@	P2B-SCMEZ-111-SH
	1-15/16	**127680**	P2B-SCEZ-115-SHCR	**056800**	P2B-SCEZ-115-SH
	2	@	P2B-SCEZ-200-SHCR	**062879**	P2B-SCEZ-200-SH
	50mm	***127702***	*P2B-SCEZ-50M-SHCR*	@	*P2B-SCEZ-50M-SH*

@ Assembled to order

*20 piece minimum

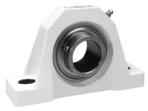

E-Z KLEEN Mounted Bearings

SCEZ NORMAL DUTY STAINLESS STEEL HOUSED PILLOW BLOCKS

Series	Shaft Size	Weight lbs / kg	A	B	C	D		F Bolt Dia.	G	H	J	L	M	R	S
						min.	max.								
207	1-1/4	3.36	1-17/32	6-1/2	1-3/8	4-11/16	5-7/16	1/2	15/16	9/16	3-5/8	1-27/32	1-7/8	1/2	1-1/32
	1-3/8	3.25													
	1-7/16	3.19													
	35mm	*1.47*	*38.9*	*165.1*	*34.9*	*119.1*	*138.1*	*M12*	*23.8*	*14.3*	*92.1*	*46.8*	*47.6*	*12.7*	*26.2*
208	1-1/2	4.39	1-11/16	7	1-1/2	5-3/16	6	1/2	31/32	3/4	4	2-3/64	2-1/8	19/32	1-3/32
	1-5/8														
	40mm	*1.95*	*42.9*	*177.8*	*38.1*	*131.8*	*152.4*	*M12*	*24.6*	*19.1*	*101.6*	*52.0*	*54.0*	*15.1*	*27.8*
208 (SCB)	1-1/2	3.93	1-11/16	7	1-1/2	5-3/16	6	1/2	31/32	9/16	3-13/16	2-3/64	1-15/16	19/32	1-3/32
	40mm	*1.74*	*42.9*	*177.8*	*38.1*	*131.8*	*152.4*	*M12*	*24.6*	*14.3*	*96.8*	*52.0*	*49.2*	*15.1*	*27.8*
210	1-11/16	5.14	1-3/4	8	1-5/8	5-49/64	6-11/16	5/8	1-9/64	5/8	4-5/16	2-7/16	2-1/4	19/32	1-5/32
	1-15/16	5.09													
	50mm	*2.29*	*44.6*	*203.2*	*41.3*	*146.4*	*169.9*	*M16*	*29.0*	*15.9*	*109.5*	*61.9*	*57.2*	*15.1*	*29.4*

FEATURES/BENEFITS PAGE B1-2	SELECTION PAGE B1-5	INTERCHANGE PAGE B1-88	ACCESSORIES PAGE B1-90