3D PDF DATASHEET



eCATALOGsolutions

Create Your Individual 3D PDF Datasheet

Learn How to Create Your Mechanical Product Catalog



BIMcatalogs.net

Learn How to Create Your BIM Product Catalog



PARTsolutions

Reduce Your Costs in Engineering and Purchasing

104056

Type C Bearings

BALDOR · DODGE

3D View

To activate the interactive 3D view, you must trust this document (see hint on the top) in Adobe Acrobat and click on the question mark.

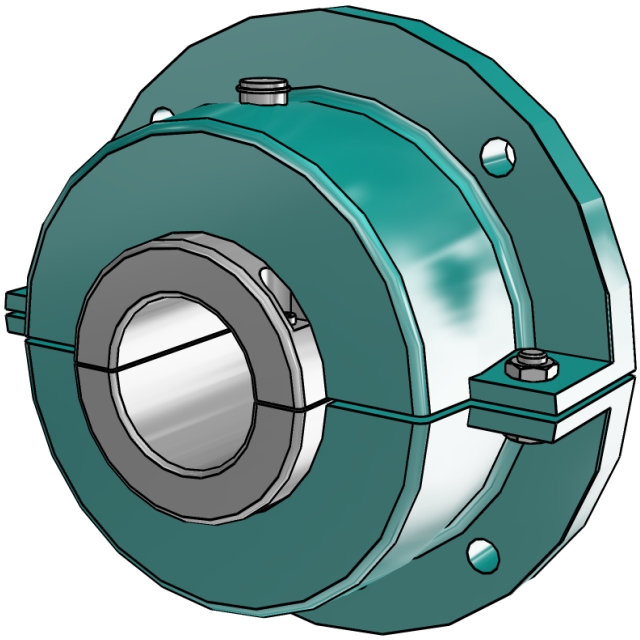

Zoom

Moves you toward or away from objects in the scene when you drag vertically. You can also zoom with the hand tool by holding down Shift as you drag.

Pan

Moves the model vertically and horizontally only. You can also pan with the hand tool: Ctrl-drag.

Rotate

Turns 3D objects around relative to the screen. How the objects move depends on the starting view, where you start dragging and the direction in which you drag.

3D PDF DATASHEET



eCATALOGsolutions



BIMcatalogs.net



PARTsolutions

Create Your Individual 3D PDF Datasheet

Learn How to Create Your Mechanical Product Catalog

Learn How to Create Your BIM Product Catalog

Reduce Your Costs in Engineering and Purchasing

104056

Type C Bearings

BALDOR · DODGE

2D Derivation

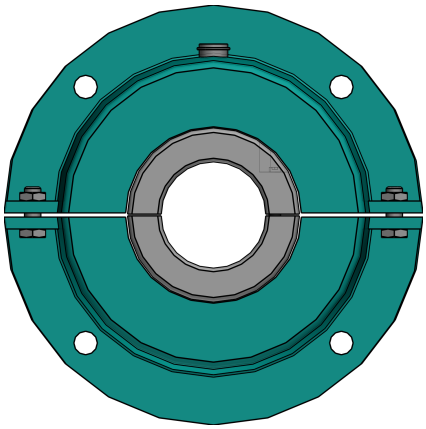

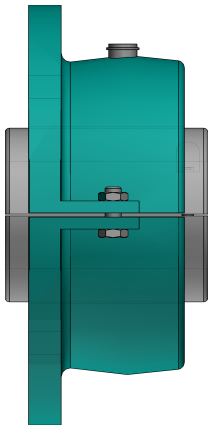

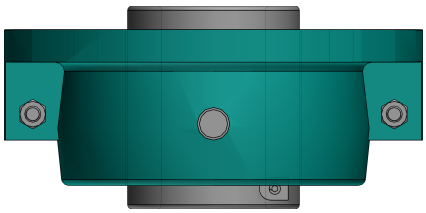

ISO View

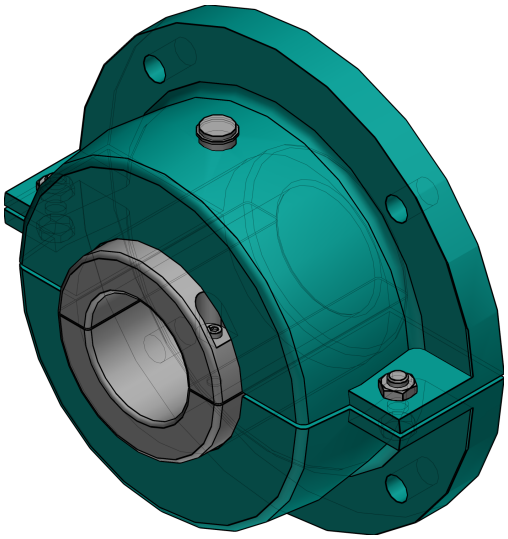

3D PDF DATASHEET



eCATALOGsolutions



BIMcatalogs.net



PARTsolutions

Create Your Individual 3D PDF Datasheet

Learn How to Create Your Mechanical Product Catalog

Learn How to Create Your BIM Product Catalog

Reduce Your Costs in Engineering and Purchasing

104056

Type C Bearings

BALDOR · DODGE

Technical Drawings

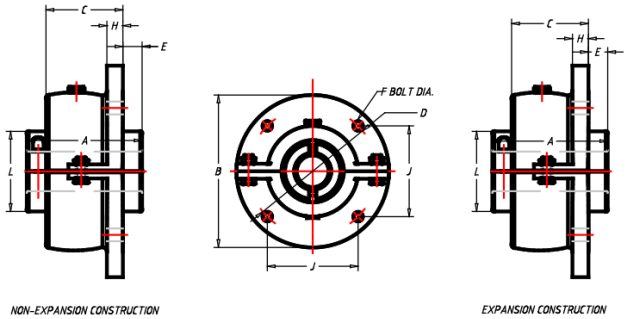

NOTES:

GREASE USED:
EXXON MOBIL XHP 222

SEAL TYPE:
METALLIC LABYRINTH SEAL

3D PDF DATASHEET



eCATALOGsolutions



BIMcatalogs.net



PARTsolutions

Create Your Individual 3D PDF Datasheet

Learn How to Create Your Mechanical Product Catalog

Learn How to Create Your BIM Product Catalog

Reduce Your Costs in Engineering and Purchasing

104056

Type C Bearings

BALDOR·DODGE

Technical Data

SS (Shaft Size / INCH)	3-7/16
TYPE (Expansion Type)	Gray Iron Expansion
PN (Part Number)	104056
DESCRIPTION (Description)	F4B-C-307E
WEIGHT (Weight / lbs)	140
A (A / INCH)	7
B (B / INCH)	14-1/2
C (C / INCH)	5-3/8
D (D / INCH)	12-1/2
E (E / INCH)	13/16
F (Bolt Diameter / INCH)	7/8
H (H / INCH)	1-1/8
J (J / INCH)	8.839
L (L / INCH)	5-15/16
EXP (EXP* / INCH)	1/4

3D PDF DATASHEET



eCATALOGsolutions



BIMcatalogs.net



PARTsolutions

Create Your Individual 3D PDF Datasheet

Learn How to Create Your Mechanical Product Catalog

Learn How to Create Your BIM Product Catalog

Reduce Your Costs in Engineering and Purchasing

104056

Type C Bearings

BALDOR · DODGE

Bill of Materials

N°	Name	Description	Amount
1	assembly	104056	1
1.1	f4b_c_body	104056rt	1
1.2	p2b_c_insert	065297ii	1