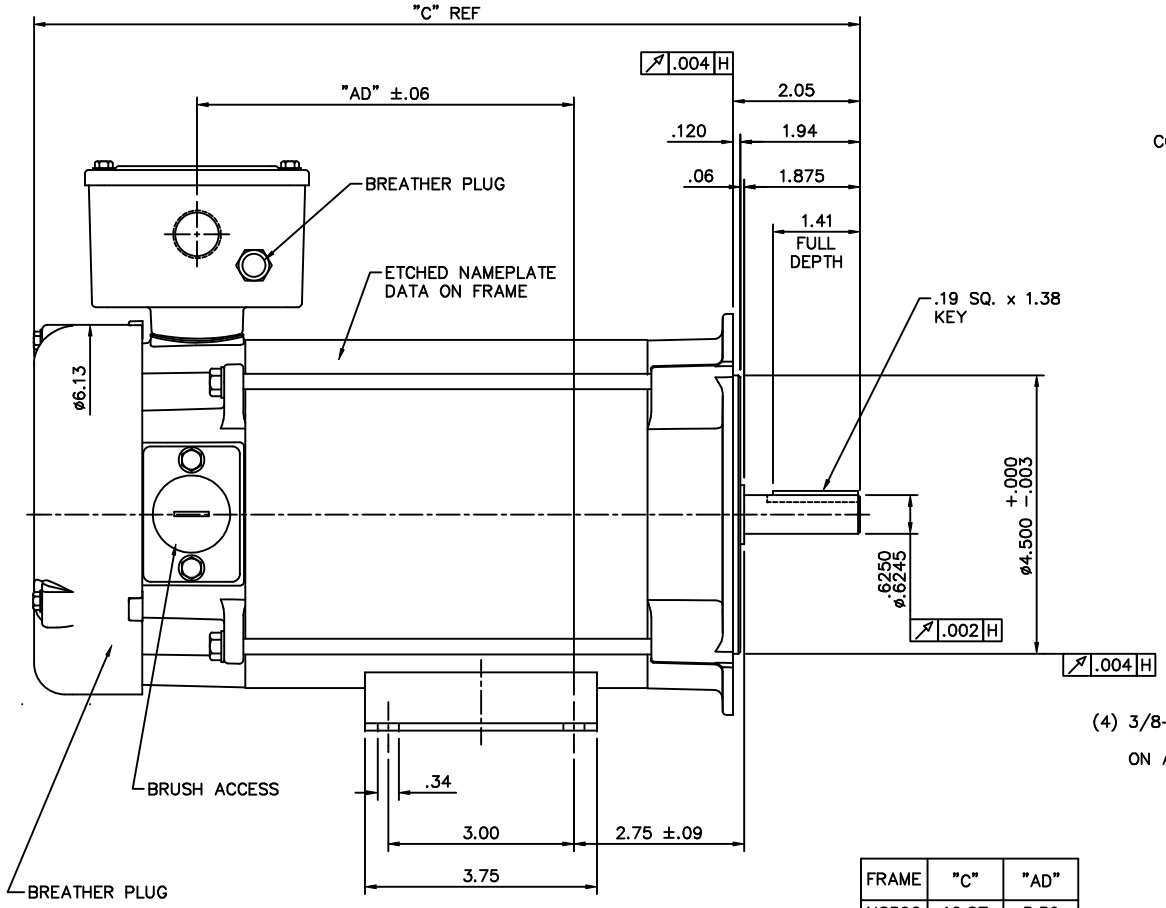

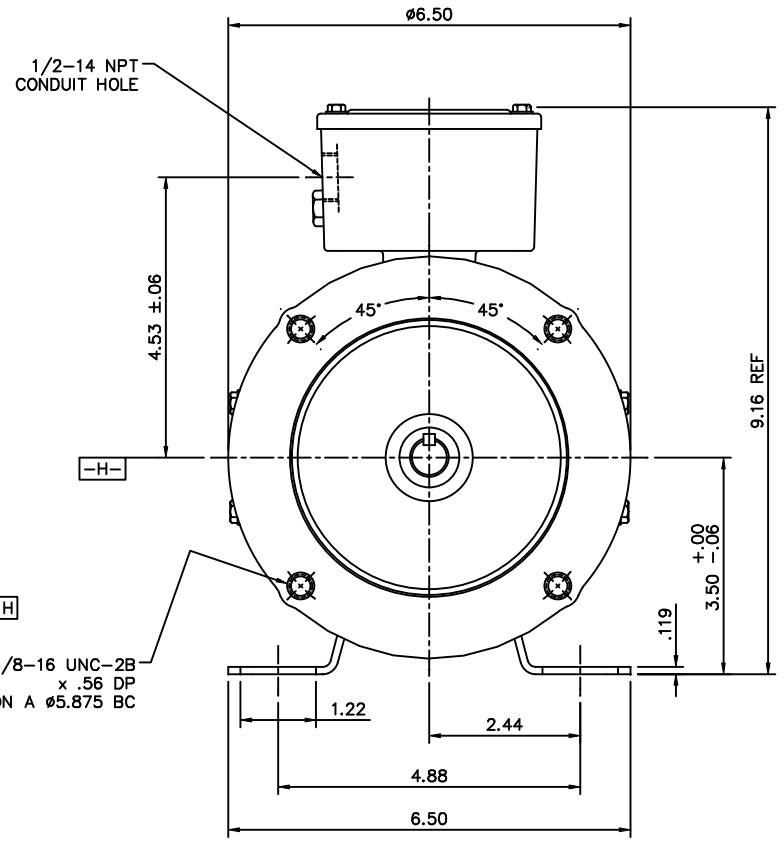

FRAME	"C"	"AD"
NS56C	12.87	5.59
RS56C	13.37	6.09
US56C	13.87	6.59
VS56C	14.37	7.09
WS56C	14.87	7.59
XS56C	15.37	8.09
YS56C	15.87	8.59
ZS56C	16.37	9.09

STAINLESS STEEL WASHGUARD MOTOR
SPECIAL FEATURES:

1) VITON CONDUIT BOX & COVER GASKETS
2) VITON O−RINGS IN ENDBELL RABBETS
3) VITON O−RINGS IN BRUSH HOLDER & CAP
4) VITON SHAFT SEAL
5) BREATHER PLUGS IN CONDUIT BOX & ENDBELL
6) ETCHED NAMEPLATE DATA ON MOTOR FRAME
7) ALL−STAINLESS STEEL CONSTRUCTION

NO.	REVISION	BY & DATE	CHK
02	ADDED FRAME DESIGNATION TO TABLE, PER 109075.00	IPG 1/11/05	SAD
01	RELEASED FOR PRODUCTION	PG 11/30/04	PG

TOLERANCES UNLESS SPECIFIED

DEC.	INCHES
.X	±.1
.XX	±.03
.XXX	±.005
.XXXX	±.0005
ANG	±1/2°

LEESON ELECTRIC MOTORS GEARMOTORS AND DRIVES

TITLE: OUTLINE
48 FRAME DC − S56C MOUNT − TEFC

MAT'L. STAINLESS STEEL
FINISH
CAD FILE 031741

RFP
DIST

DRAWN	PG 9/8/03
CHK	
APPD	PG 11/30/04
SCALE	1=2
REF	030967
FMF	STANDARD
PREV	

SIZE B | DRAWING NO. 031741.00 | REV. 02

THIS DRAWING IN DESIGN AND DETAIL IS OUR PROPERTY AND MUST NOT BE USED EXCEPT IN CONNECTION WITH OUR WORK ALL RIGHTS OF DESIGN AND INVENTION ARE RESERVED
THIS IS AN ELECTRONICALLY GENERATED DOCUMENT − DO NOT SCALE THIS PRINT

ERROR: syntaxerror
OFFENDING COMMAND: --nostringval--

STACK:

/im
-savelevel-