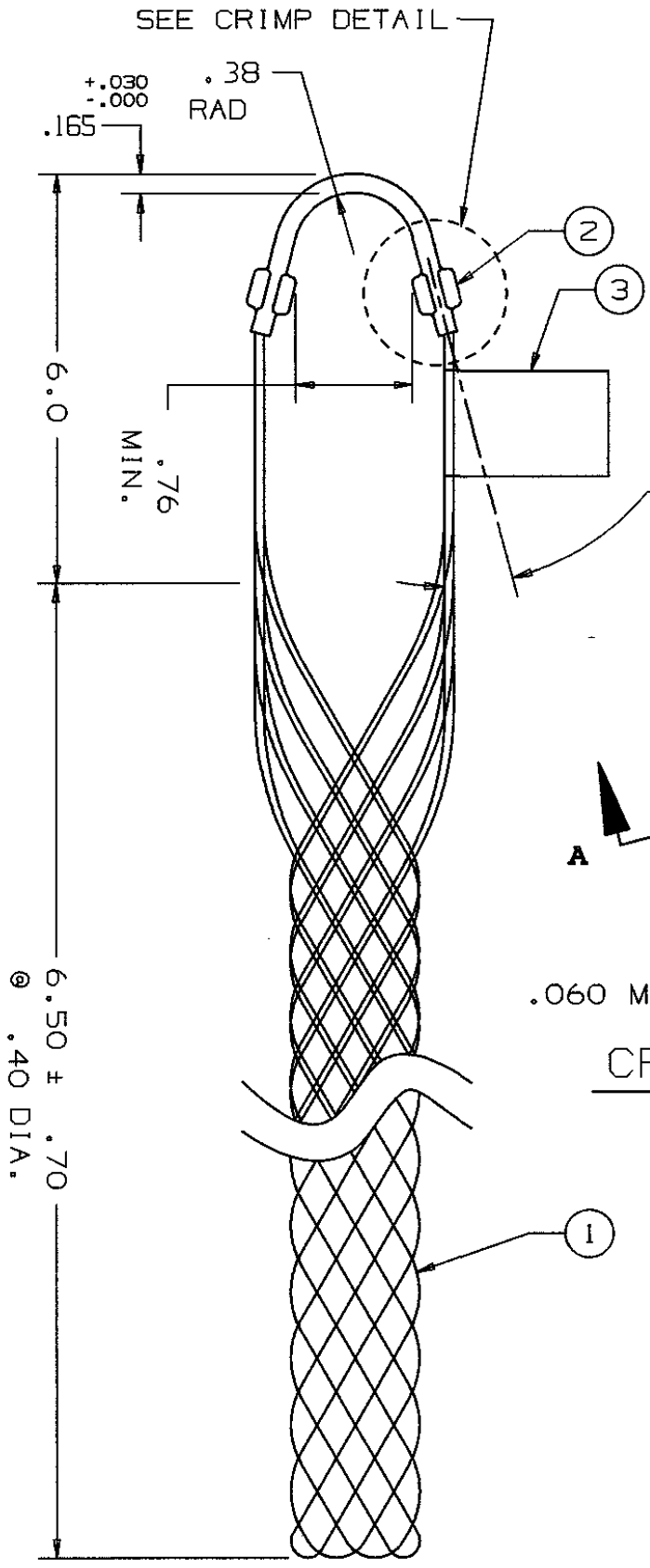

COMPONENT LIST

ITEM NO.	DESCRIPTION	MAT'L	COMPONENT NO.	QTY.
1	STRAND	T BRZ	302-01-002	-
2	EYE	CU	342-43-004	1
3	TAG	MYLAR		1

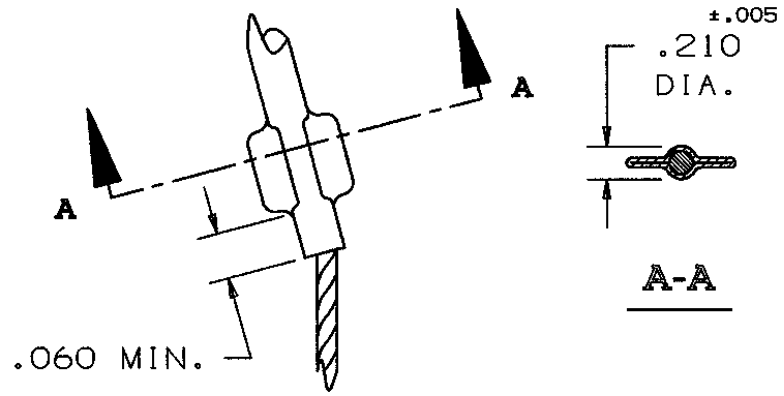

CRIMP DETAIL

2 PL.

IN ACCEPTING OUR DRAWINGS OR BLUEPRINTS FOR QUOTATION OR OTHER PURPOSES, YOU AGREE NOT TO DISCLOSE TO OTHERS THE IDEAS, INFORMATION, OR DESIGNS THEREIN SHOWN, AND THAT YOU WILL MAKE NO USE OF OUR DRAWINGS OR BLUEPRINTS OR OF THE IDEAS, INFORMATION, OR DESIGNS THEREIN SHOWN WITHOUT OUR PERMISSION.

TITLE GRIP,HEAVY SERVICE DROP,CLOSED MESH, SINGLE-DOUBLE WEAVE,SINGLE "U" EYE DIA. RA .35-.44 APPROX BRK STR. 870# ±20%

TOLERANCES UNLESS OTHERWISE SPECIFIED
.X = ±.5
.XX = ±.05
.XXX = ±.015
ANGLE TOL. ± 2°

HUBBELL INCORPORATED
KELLEMS DIVISION
STONINGTON, CT

DR. BY FBR	APP. BY FFS
TR. BY	SCALE N/A
CHK. BY JLW	DATE 11-1-93

PROJECT NO.

DR. NO. 022-17-003

REV. K

SHEET 1 OF 1