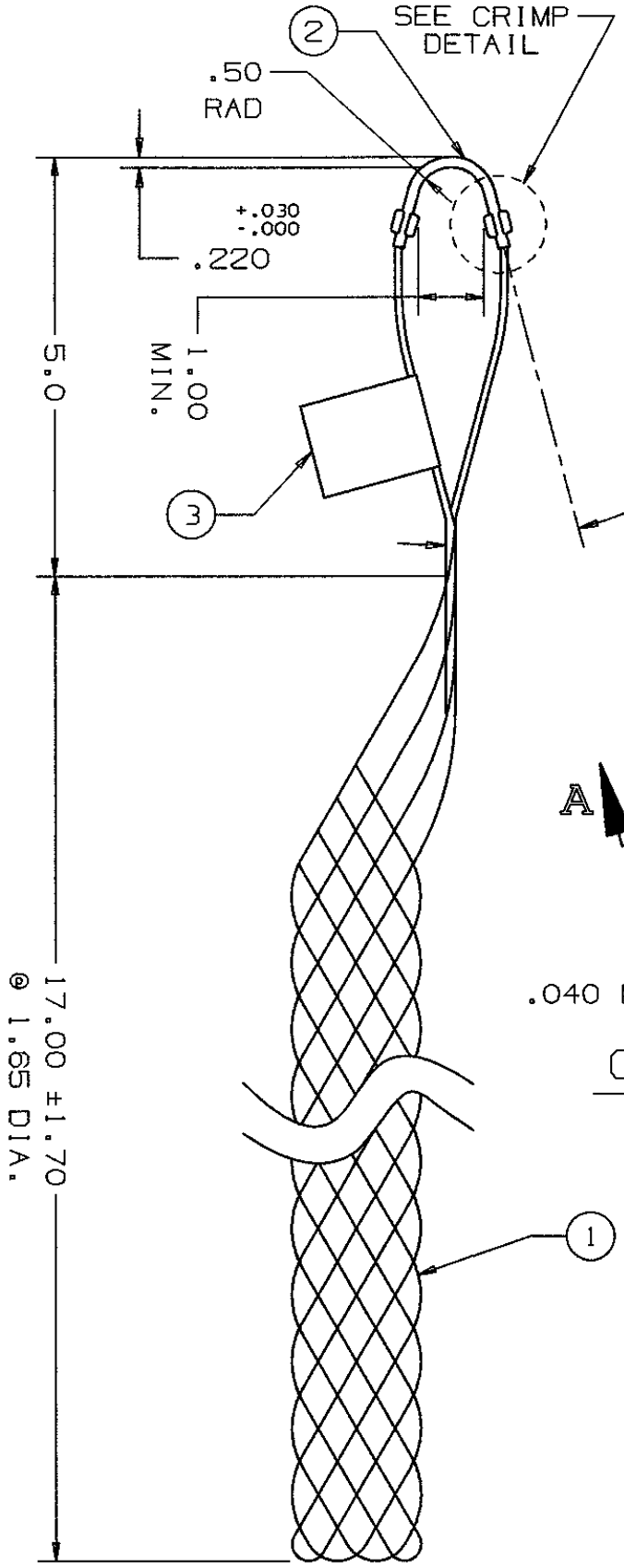

COMPONENT LIST

ITEM NO.	DESCRIPTION	MAT'L	COMPONENT NO.	QTY.
1	STRAND	SST	304-01-008	-
2	EYE	SST	304-46-080	1
3	TAG	MYLAR		1

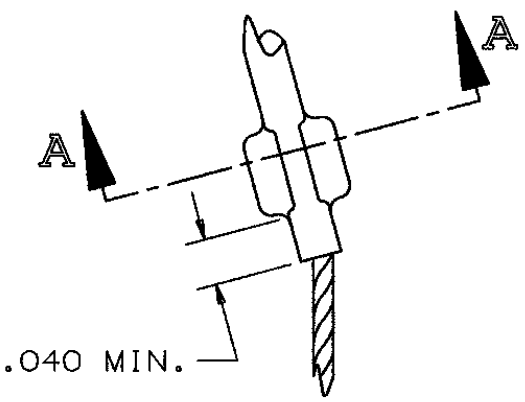

CRIMP DETAIL

2 PL.

IN ACCEPTING OUR DRAWINGS OR BLUEPRINTS FOR QUOTATION OR OTHER PURPOSES, YOU AGREE NOT TO DISCLOSE TO OTHERS THE IDEAS, INFORMATION, OR DESIGNS THEREIN SHOWN, AND THAT YOU WILL MAKE NO USE OF OUR DRAWINGS OR BLUEPRINTS OR OF THE IDEAS, INFORMATION, OR DESIGNS THEREIN SHOWN WITHOUT OUR PERMISSION.

TITLE GRIP,STD.SUPPORT,CLOSED MESH,SST
SINGLE WEAVE,SINGLE OFFSET EYE
DIA.RA. 1.50-1.74
APPROX.BRK.STR. 3700# ±20%

TOLERANCES UNLESS OTHERWISE SPECIFIED
.X = ±.5
.XX = ±.05
.XXX = ±.015
ANGLE TOL. ± 2°

HUBBELL INCORPORATED
KELLEMS DIVISION
STONINGTON, CT

PROJECT NO.	DR. BY KJW	APP. BY FFS
	TR. BY	SCALE N/A
	CHK. BY FFS	DATE 12/8/93

DR. NO. 024-01-043

REV. H

SHEET 1 OF 1