Straight Blade Devices

15A, 125V, 2 Pole, 3 Wire Grounding

Special Combination Duplex Receptacles

HUBBELL



Ordering Information

Description	Device Color	UPC	Catalog Number
Brown RTP, 2 feeds, 2	Brown	783585237015	HBL4795

Listings

UL Listed to UL498 File E2186
Certified to CSA, C22.2, No. 42 file 285

Specifications

Face	Reinforced thermoplastic polyester
Base	Reinforced thermoplastic polyester
Power Contacts	.032" (.81) Brass

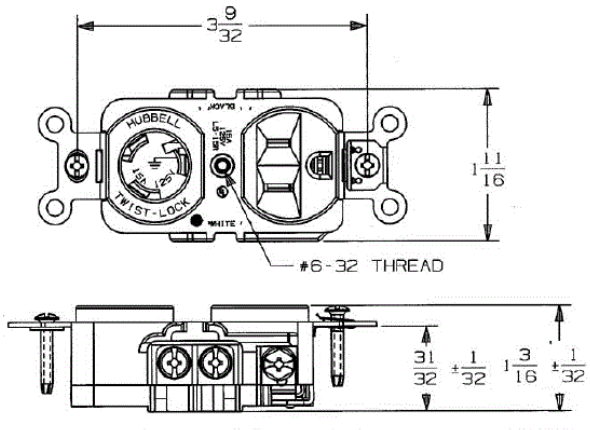

Performance

Electrical

Current Interrupting	Certified for current interrupting at full rated current
Dielectric Voltage	Withstands 2,000V minimum

Mechanical

Product Identification	Ratings are a permanent part of the device
Terminal Accommodation	#14-#10 AWG copper stranded or solid conductor only
Terminal Identification	Terminals identified in accordance with UL 498 and CSA

Environmental

Flammability	UL 94 V-2 or better
Operating Temperatures	Maximum continuous 75°C; minimum -40°C (w/o impact)

Online Resources

Customer Use Drawing
eCatalog
Installation Instructions

Accessories

Wallplate or Weatherproof Cover	**Duplex Openin**

Dimensions in Inches (mm)

Hubbell Wiring Device-Kellems • Hubbell Incorporated (Delaware) • 40 Waterview Drive • Shelton, CT 06484
Phone (800) 288-6000 • Fax (800) 255-1031 • Specifications subject to change without notice.

HUBBELL® Wiring Device-Kellems