Raceway
Alumninum Raceway
HBLALU5000 Series Two Channel Base

Features

- Satin anodized finish
- Packed 40 ft. (12.19m) per carton, 10 ft. (3m) lengths.
- Available in Pre-Wired Raceway



Ordering Information

Description	Material	UPC Number	Catalog Number
Two Channel Base	Anodized Aluminum	783585110769	**HBLALU5000B10**

Listings

UL Listed
CSA Certified

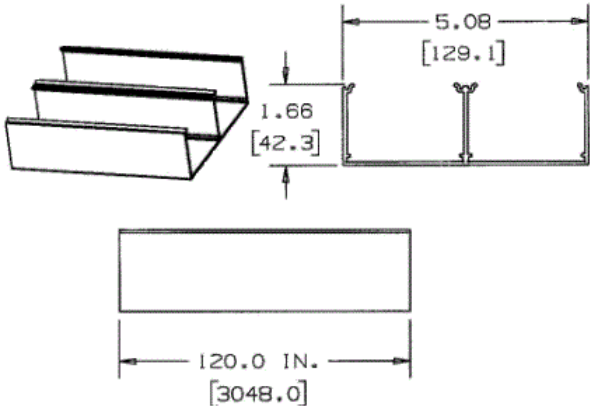

Specifications

Height	1.66"
Width	5.08"
Length	10'

Online Resources

Customer Use Drawing
eCatalog
Installation Instructions