M-8925 | 2

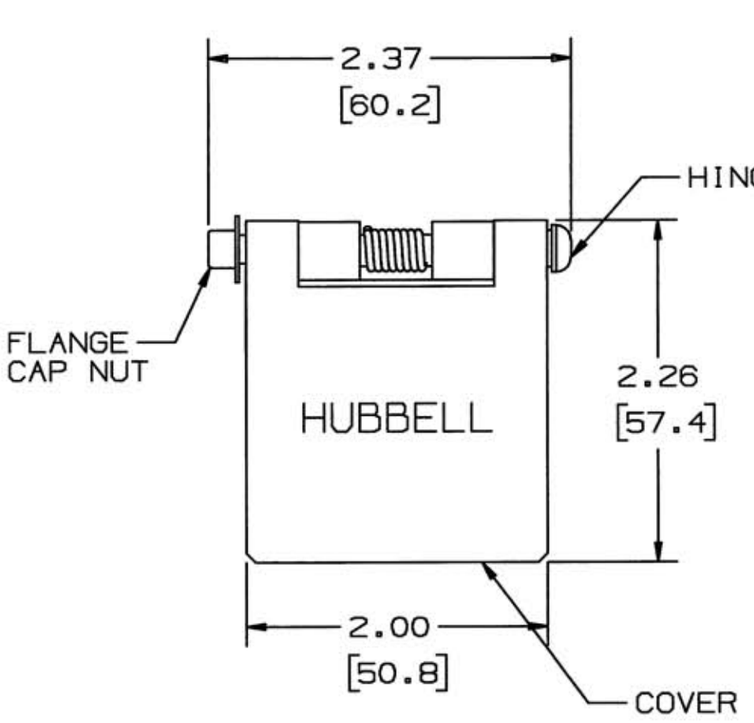

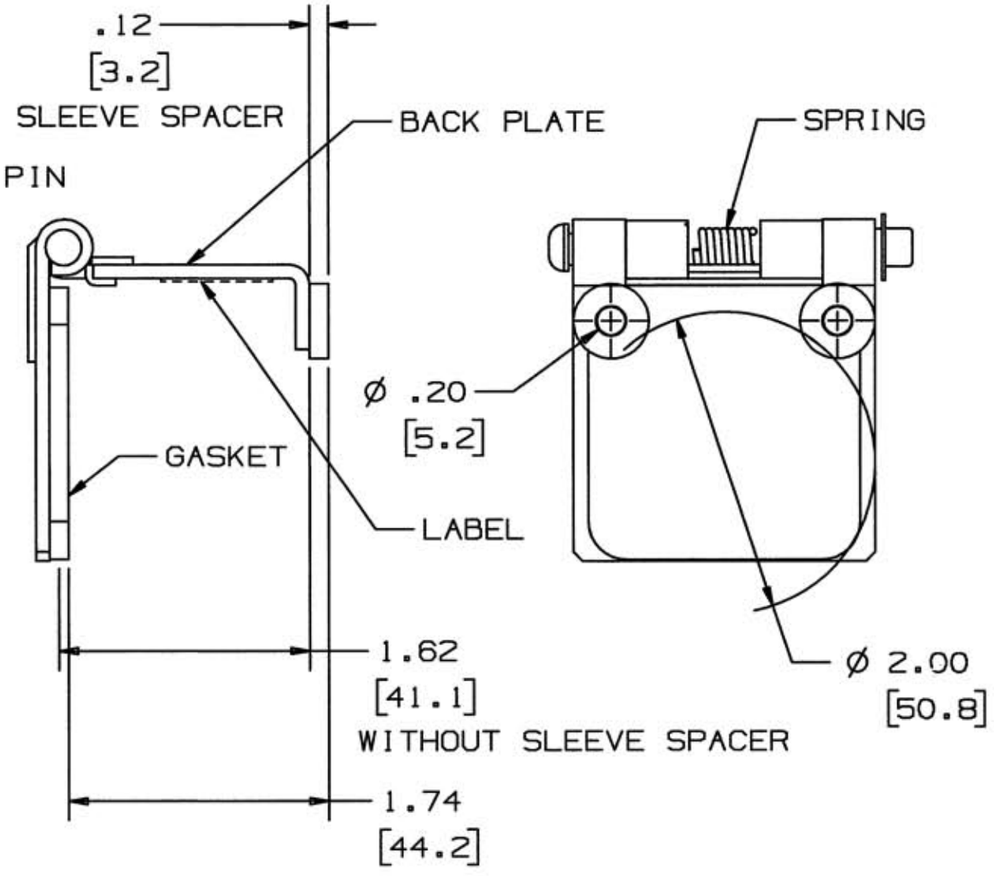

NOTES:
1. DIMENSIONS ARE INCHES ±.02
   [mm] ±.5
2. COVER IS SELF CLOSING WHEN INSTALLED
3. UL/c-UL ENCLOSURE TYPE 3R,
   SEE INSTRUCTION SHEET

HUBBELL CAT. NO.	COLOR
HBLSCBK	BLACK
HBLSCW	WHITE
HBLSCGN	GREEN
HBLSCBR	RED
HBLSCBL	BLUE
HBLSCO	ORANGE
HBLSCBN	BROWN
HBLSCY	YELLOW

CODE 74545

LIST OF PARTS

DESCRIPTION	MATERIAL	FINISH
BACKPLATE	STEEL	ZINC & SEE TABLE
COVER	STEEL	ZINC & SEE TABLE
SPRING	STANLESS	PASSIVATE
HINGE PIN	STEEL	ZINC
FLANGE CAP NUT	STEEL	ZINC
SLEEVE SPACER	NYLON	BLACK
GASKET	CLOSED CELL FOAM	BLACK
LABEL	MYLAR	SILVER

DIMENSION SHEET FOR CAT. NO. SEE TABLE

REPAIRABLE ☐ NON-REPAIRABLE ☒

SYM	REVISIONS	APP	DATE
2	UPDATED ASSEMBLY PER DCN 11484 MJM TwB	TwB	1/17/05
1	RELEASED PER DCN 10992 MJM TB	TwB	6/25/03

THE DESIGN AND DIMENSIONS OF THE PRODUCT SHOWN ON THIS DRAWING ARE SUBJECT TO CHANGE WITHOUT NOTICE

TITLE
SINGLE POLE
SNAP BACK COVER

M-8925 B 2

TOLERANCES UNLESS OTHERWISE SPECIFIED
FRACTIONS ±1/64
DECIMALS ±.005
ANGLES ±2°

WIRING DEVICE-KELLEMS
HUBBELL INCORPORATED
BRIDGEPORT, CT

DR. BY TwB | APP. BY
TR. BY | SCALE 1:1
CHK'D BY | DATE 6/11/03