M-7993 4

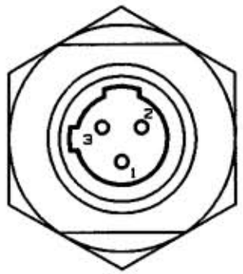

FIGURE 2

WIRE	COLOR
1	GREEN
2	RED/BLACK
3	RED/WHITE

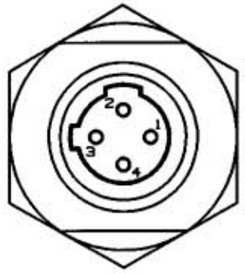

FIGURE 3

WIRE	COLOR
1	RED/BLACK
2	RED/WHITE
3	RED
4	GREEN

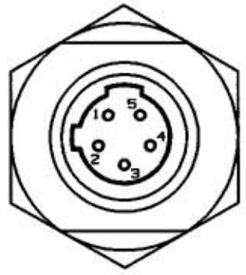

FIGURE 4

WIRE	COLOR
1	RED/WHITE
2	RED
3	GREEN
4	RED/YELLOW
5	RED/BLACK

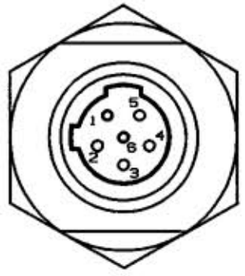

FIGURE 5

WIRE	COLOR
1	RED/WHITE
2	RED
3	GREEN
4	RED/YELLOW
5	RED/BLACK
6	RED/BLUE

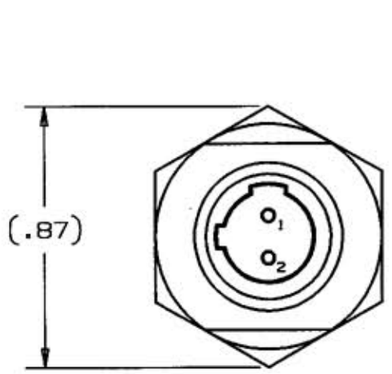

FIGURE 1

WIRE	COLOR
1	BROWN
2	BLUE

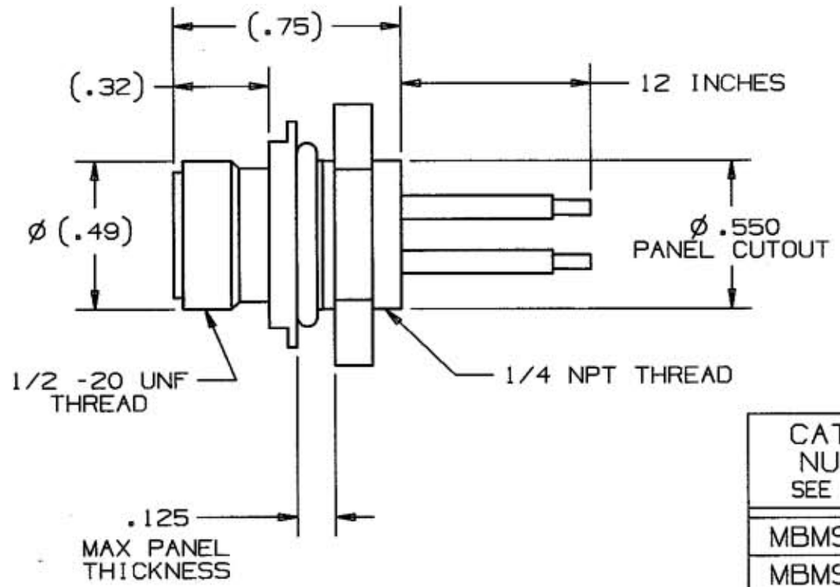

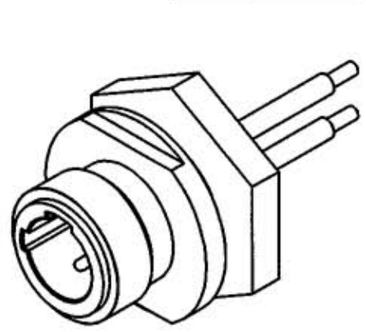

NOTES:

1. REMOVED THIS NOTE.
2. REMOVED THIS NOTE.
3. REMOVED THIS NOTE.
4. CATALOG NUMBER MBMS22325 DENOTES A 22 AWG PVC WIRE; MBMS22425 DENOTES A 18 AWG PVC WIRE.

CATALOG NUMBER SEE NOTE 4	SEE FIGURE NUMBER	NUMBER OF POLES	AMPS
MBMS22325	1	2	5
MBMS22425			8
MBMS23325	2	3	5
MBMS23425			8
MBMS24325	3	4	4
MBMS24425			6
MBMS25325	4	5	4
MBMS25425			5
MBMS26325	5	6	3

CODE 74545

LIST OF PARTS

DESCRIPTION	MATERIAL	FINISH
RECEPTACLE SHELL	BRASS	NICKEL
INSULATOR	NYLON	WHITE
O-RING	RUBBER	BLACK
LOCKNUT	BRASS	NICKEL
PIN CONTACT	BRASS	GOLD OVER Pd/Ni
WIRE	SEE NOTE	4

DIMENSION SHEET FOR CAT. NO. SEE CHART

REPAIRABLE ☐ NON-REPAIRABLE ☒

SYM	REVISIONS	APP	DATE
4	REMOVED NOTES 1, 2, & 3; IN SIDE VIEW, ".125 MAX PANEL THICKNESS" WAS "MAX PANEL THICKNESS SEE NOTE 2"; "1/4 NPT THREAD" WAS "THREAD SEE NOTE 1"; "Ø .550 PANEL CUTOUT" WAS "PANEL CUTOUT Ø SEE NOTE 3"; IN TABLE, ADDED "25" SUFFIX TO CAT. NO.'S AND "SEE NOTE 1" WAS "SEE NOTES 1 & 4"; IN PARTS LIST, REMOVED "LOCKNUT/STEEL/ ZINC"; ADDED "1/4 NPT" TO DWG TITLE: PER DCN #8643. JMN GPH		5/25/01
3	CHANGED PER DCN7403. DJH GPH		01/27/00
2	CHANGED CURRENT RATING ON 2, 3, AND 4 POLE PER DCN7275. DJH		11/18/99
1	RELEASED PER DCN5711-20. DJH		06/02/99

THE DESIGN AND DIMENSIONS OF THE PRODUCT SHOWN ON THIS DRAWING ARE SUBJECT TO CHANGE WITHOUT NOTICE

TITLE
MALE RECEPTACLE, 300V
DUAL KEY, EXTERNAL THREAD,
1/4 NPT

TOLERANCES UNLESS OTHERWISE SPECIFIED
FRACTIONS ±1/64
DECIMALS ±.005
ANGLES ±2°

WIRING DEVICE-KELLEMS
HUBBELL INCORPORATED
BRIDGEPORT, CT

DR. BY DJH	APP. BY GH
TR. BY	SCALE NONE
CHK'D BY GH	DATE 06/02/99

B M-7993 4