# M-11793 | 1

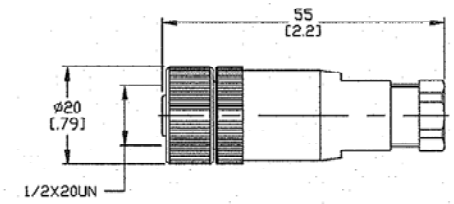


DIMENSIONS ARE INCHES [ mm ]



0.78 [ 20mm ] — 0.20 [ 5mm ]

WIRE STRIP LENGTH

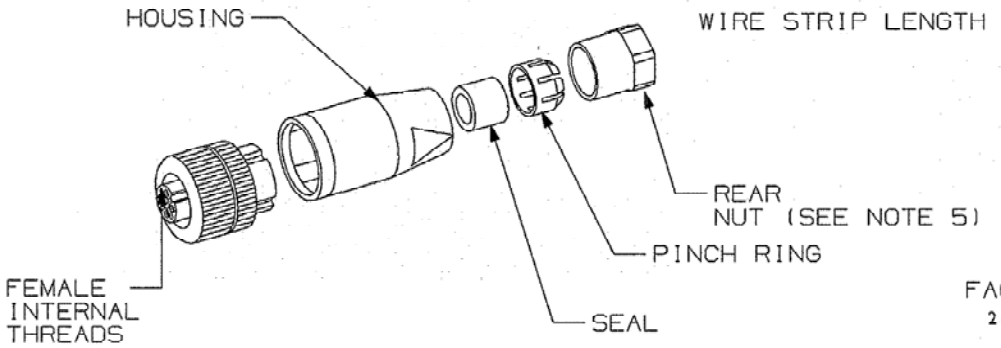


FACE VIEW 3P




Female

PINOUT AND COLOR CODE
1 GREEN
2 RED/BLACK TR
3 RED/WHITE TR

NOTES: UNLESS OTHERWISE SPECIFIED:

1. WIRE SIZE: 18AWG (0.75mm²) MAX.
2. ENCLOSURE RATING: IP67
3. OPERATING TEMPERATURE: -40° C TO 90° C.
4. c UL us RECOGNIZED.
5. RECOMMENDED REAR NUT TORQUES
   F7 STYLE - 7-8 IN.LBS (80-100 Ncm)
   F9 STYLE - 7-8 IN.LBS (80-100 Ncm).
6. RECOMMENDED TERMINAL TORQUE
   3.54 IN.LBS (40Ncm)

| CATALOG NO. | POLES | RATING | CABLE RANGE |
|---|---|---|---|
| MCMS23F7 | 3 | 250V/4A | 0.16-0.24 IN. |
| MCMS23F9 | 3 | 250V/4A | 0.24-0.32 IN. |

CODE 74545

LIST OF PARTS

| DESCRIPTION | MATERIAL | FINISH |
|---|---|---|
| COUPLING NUT | BRASS | NICKEL PLATED |
| CONNECTOR SHELL | NYLON | BLACK |
| CONTACTS | BRASS | GOLD PLATED |
| | | PALLADIUM |
| | | NICKEL |

| SYM | REVISIONS | APP | DATE |
|---|---|---|---|
| 1 | 12/1/10 NEW RELEASE PER DCN 17341 CAC | | |

THE DESIGN AND DIMENSIONS OF THE PRODUCT SHOWN ON THIS DRAWING ARE SUBJECT TO CHANGE WITHOUT NOTICE

TITLE STRAIGHT FEMALE MICRO QUICK THD. TYPE F7, F9

TOLERANCES UNLESS OTHERWISE SPECIFIED
FRACTIONS ± 1/64
DECIMALS ± .005
ANGLES ± 2°

WIRING DEVICE-KELLEMS
HUBBELL INCORPORATED
BRIDGEPORT, CT

DR. BY CAC | APP. BY
TR. BY | SCALE NONE
CHK'D BY | DATE 12-2-10

DIMENSION SHEET FOR CAT. NO. SEE TABLE

REPAIRABLE ☒ NON-REPAIRABLE ☐

B M-11793 1