IEC Pin and Sleeve

Accessories

Closure Cap

Features

- Cap assemblies provide watertight sealing



Ordering Information

Description	UPC	Catalog Number
Closure Cap, 100A Pin and Sleeve Males	783585371009	**PC100**

Device Color
Gray

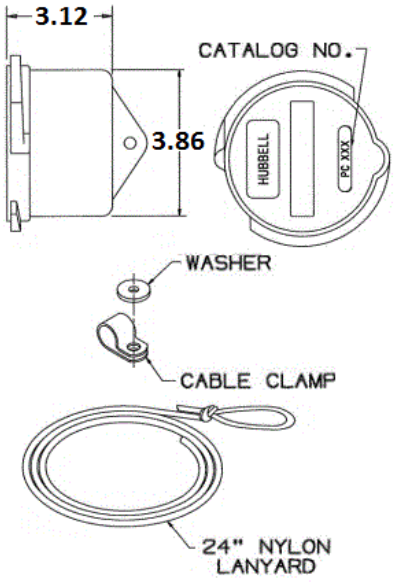

Standards

UL Listed
CSA Certified

Specifications

Gaskets	Neoprene
Assembly Screws	Stainless Steel
Hinge Spring	Stainless Steel
Replacement Part	Plug Cover

Online Resources

Customer Use Drawing
eCatalog
Installation Instructions

Dimensions in Inches (mm)

Wiring Device-Kellems