M-8244 1

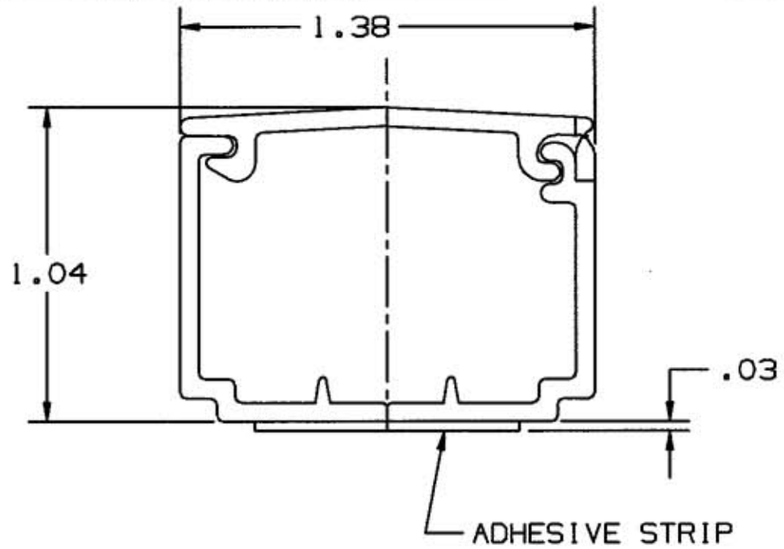

RACEWAY - 5 FT = PL1BC5
RACEWAY - 7 FT = PL1BC7
RACEWAY, WITH ADHESIVE, 5 FT = PL1ABC5
RACEWAY, WITH ADHESIVE, 7 FT = PL1ABC7

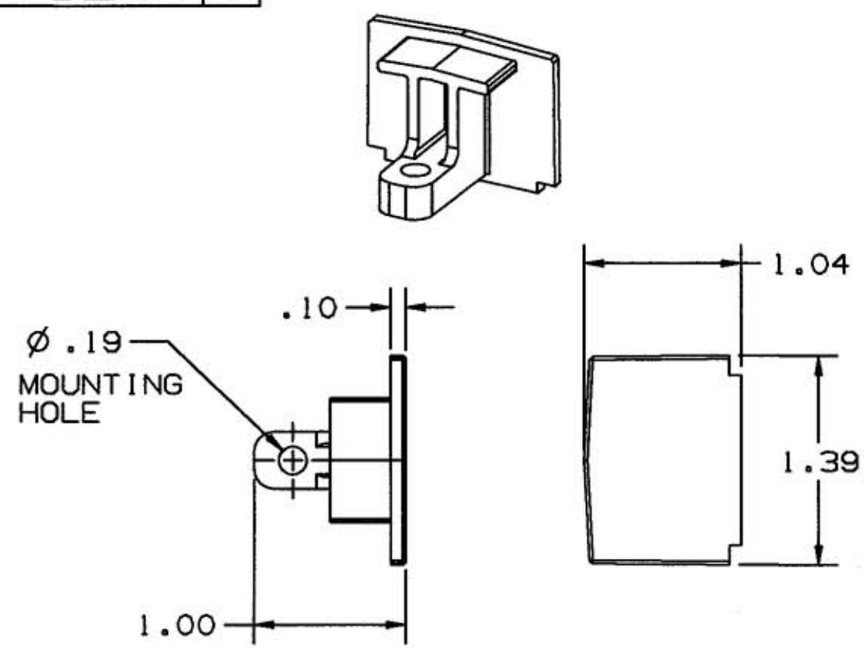

END CAP PL1EC

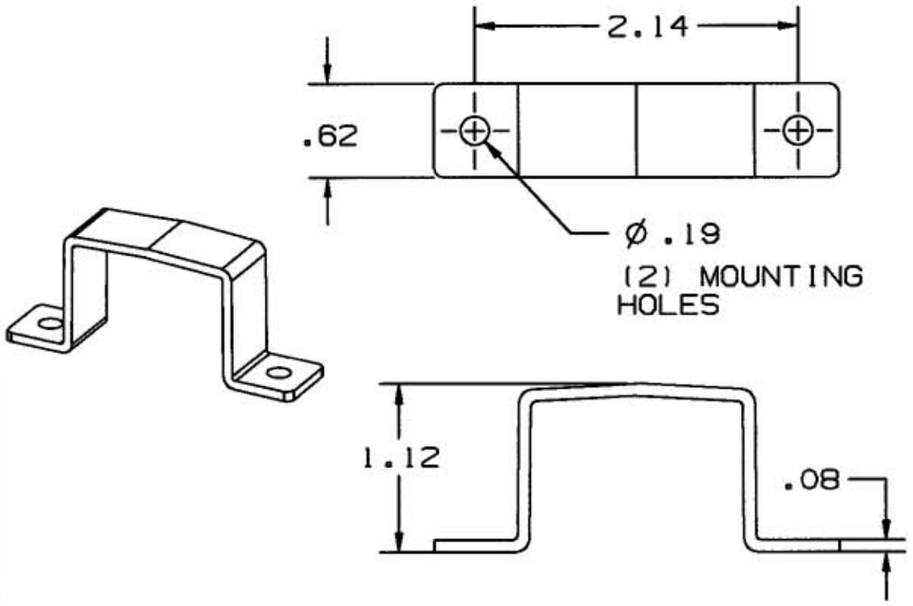

SECURITY STRAP/SPLICE COVER PL1SS

CODE 74545

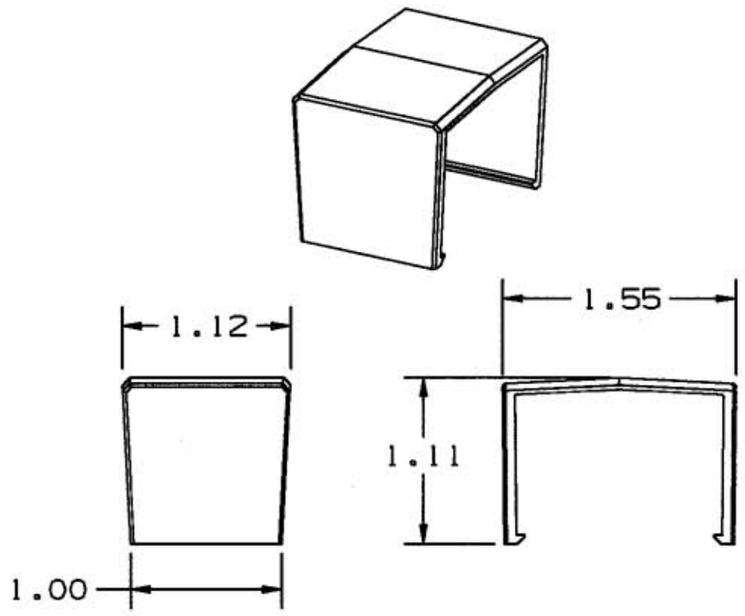

SPLICE COVER PL1SC

LIST OF PARTS

DESCRIPTION	MATERIAL	FINISH
RACEWAY	PVC	OFFICE WHITE
END CAP	PVC	OFFICE WHITE
SPLICE COVER	PVC	OFFICE WHITE
SECURITY STRAP/SPLICE COVER	PVC	OFFICE WHITE

SYM	REVISIONS	APP	DATE
1	RELEASED PER DCN 7981		9/1/00

THE DESIGN AND DIMENSIONS OF THE PRODUCT SHOWN ON THIS DRAWING ARE SUBJECT TO CHANGE WITHOUT NOTICE

TITLE RACEWAY & FITTINGS, PL1 LANTRAK

TOLERANCES UNLESS OTHERWISE SPECIFIED
FRACTIONS ±1/64
DECIMALS ±.005
ANGLES ±2°

WIRING DEVICE-KELLEMS
HUBBELL INCORPORATED
BRIDGEPORT, CT

DR. BY SRE | APP. BY SRE
TR. BY | SCALE ---
CHK'D BY SRE | DATE 2/23/00

DIMENSION SHEET FOR CAT. NO.
REPAIRABLE ☐ NON-REPAIRABLE ☒
B
M-8244
1