M-8185 1

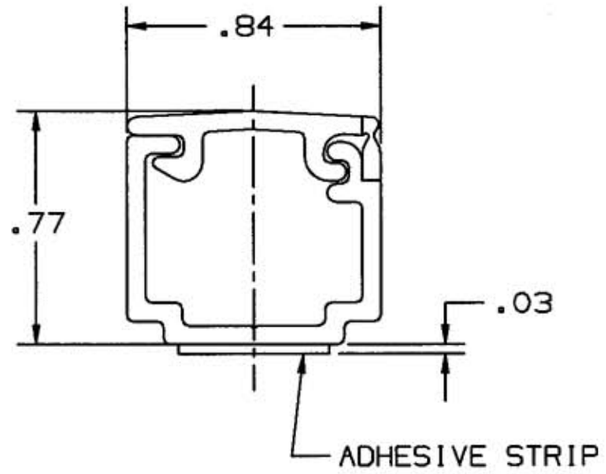

RACEWAY - 5 FT = PP1BC5
RACEWAY - 7 FT = PP1BC7
RACEWAY, WITH ADHESIVE, 5 FT = PP1ABC5
RACEWAY, WITH ADHESIVE, 7 FT = PP1ABC7

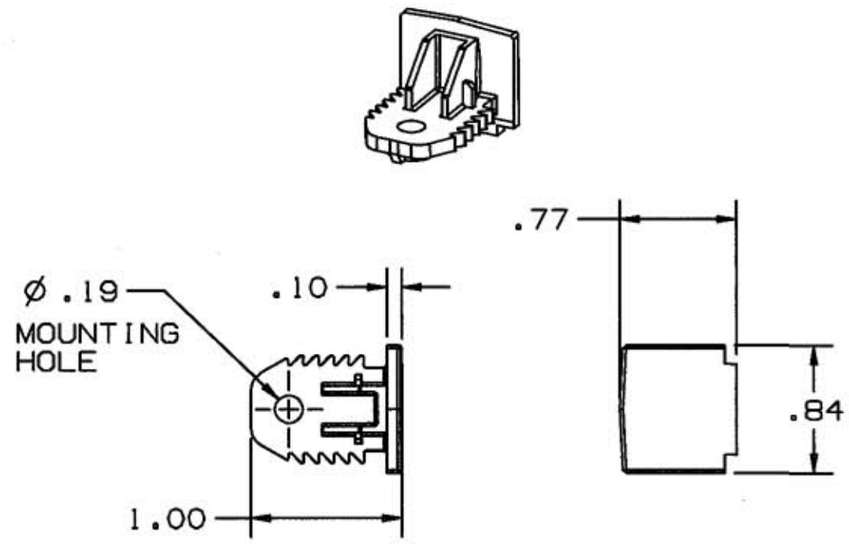

END CAP PP1EC

LIST OF PARTS		
DESCRIPTION	MATERIAL	FINISH
RACEWAY	PVC	OFFICE WHITE
END CAP	PVC	OFFICE WHITE
SPLICE COVER	PVC	OFFICE WHITE
SECURITY STRAP/SPLICE COVER	PVC	OFFICE WHITE

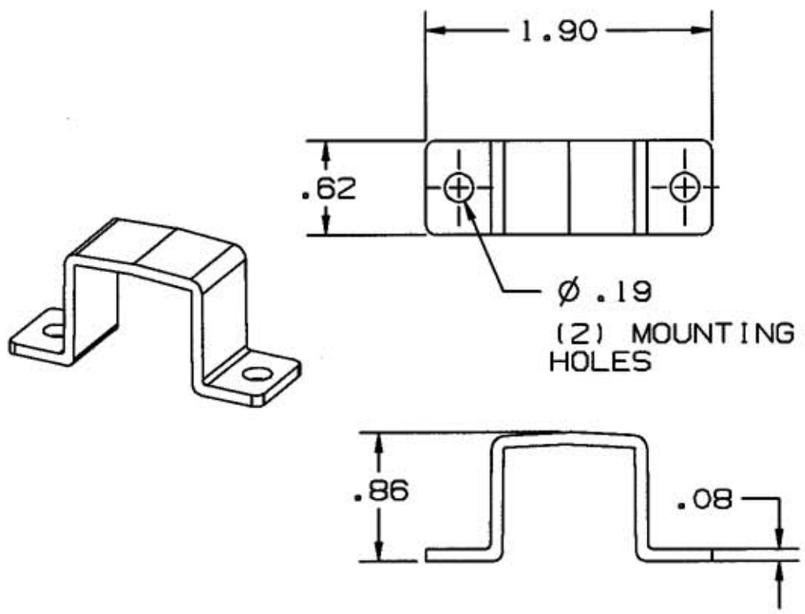

SECURITY STRAP/SPLICE COVER PP1SS

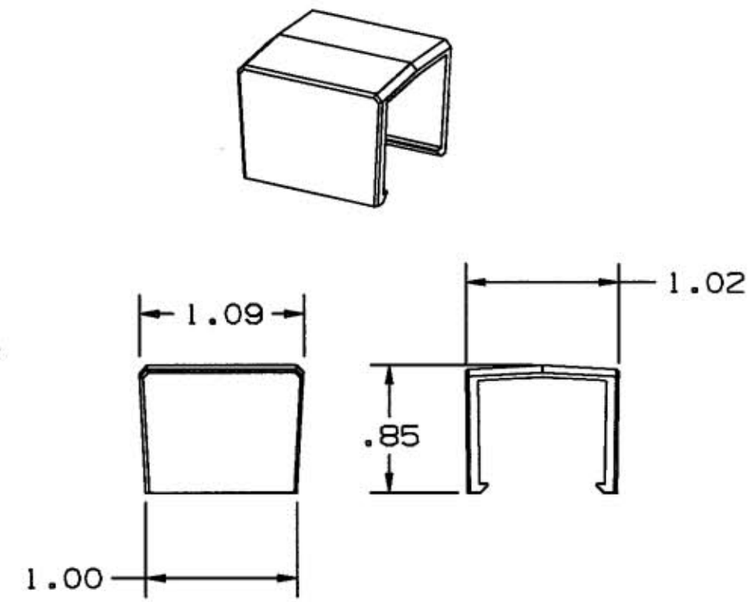

SPLICE COVER PP1SC

SYM	REVISIONS	APP	DATE
1	RELEASED PER DCN7604	SRE	4/28/00

THE DESIGN AND DIMENSIONS OF THE PRODUCT SHOWN ON THIS DRAWING ARE SUBJECT TO CHANGE WITHOUT NOTICE

TITLE RACEWAY & FITTINGS, PP1 PREMISETRAK

TOLERANCES UNLESS OTHERWISE SPECIFIED
FRACTIONS ±1/64
DECIMALS ±.005
ANGLES ±2°

WIRING DEVICE-KELLEMS
HUBBELL INCORPORATED
BRIDGEPORT, CT

DR. BY SRE	APP. BY SRE
TR. BY	SCALE ---
CHK'D BY SRE	DATE 8/12/99

CODE 74545

DIMENSION SHEET FOR CAT. NO.
REPAIRABLE ☐ NON-REPAIRABLE ☒
B
M-8185
1