Linkosity Products

Industrial Ethernet

Industrial Ethernet, NEMA 12/4 Enclosure, Cat 5e, GFCI Receptacle

Features

- Protective clear cover
- Overcurrent protection
- Finger-safe contacts
- Stainless steel snap latch



Ordering Information

Color	UPC	Catalog Number
Gray, Clear	783585524757	**PR205E**

Listings

CSA Certified, UL Recognized

Specifications

Special Features	Standard Product
Current / Amperage Rating	15 A
Height	5.1 in
Width	4.8 in
Depth	3.2
Enclosure	NEMA 12/4

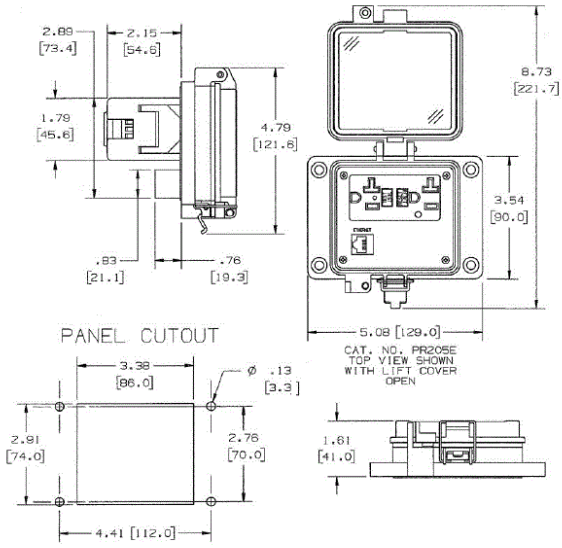

Performance

Electrical

Circuit Breaker	3A
Data Jack	Cat. 5e
GFCI	Conforms to UL 943 2006 requirement
In-Cabinet Receptacle	GFCI protected

Environmental

Enclosure	NEMA Type 4, 12 and NEMA Type 4X

Online Resources

Customer Sales Drawings
eCatalog
Installation Instructions

Dimensions in Inches (mm)

Wiring Device-Kellems