M-8060 1

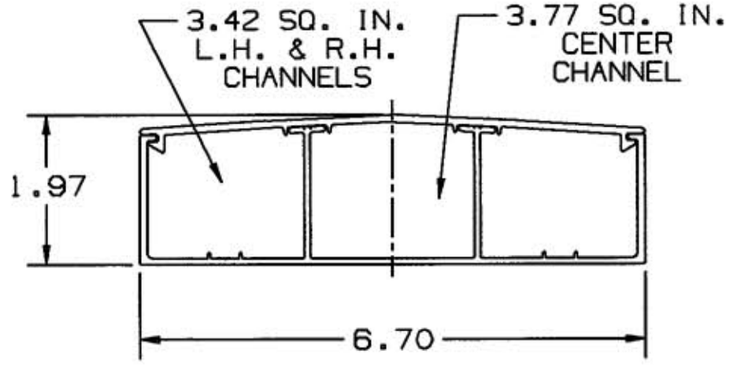

RACEWAY - BASE & COVER 5 FT = PS3BC5
RACEWAY - BASE & COVER 10 FT = PS3BC10

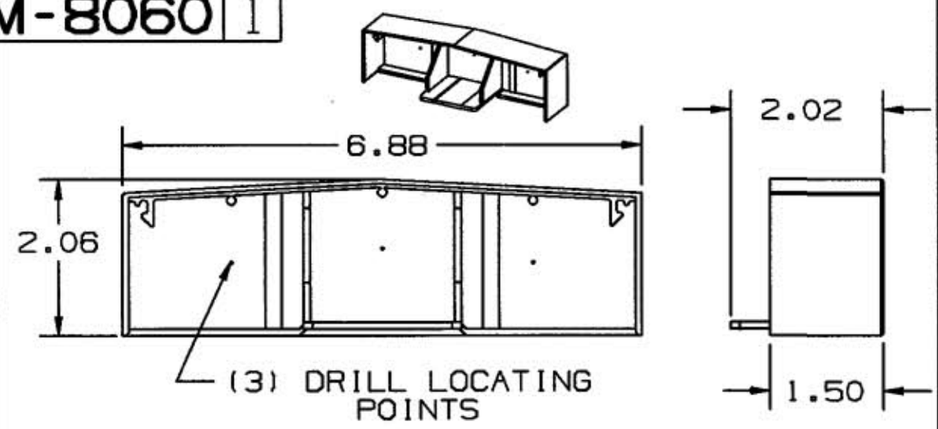

END CAP PS3EC

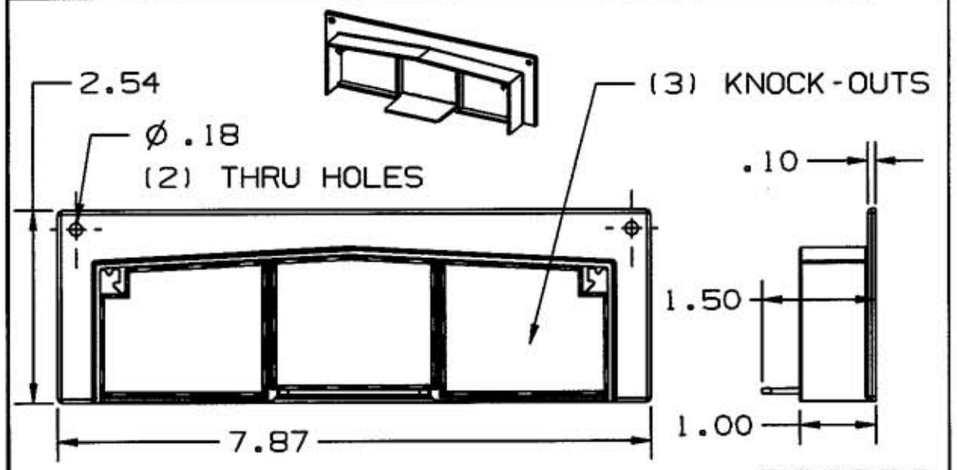

SURFACE PANEL CONNECTOR PS3SPC

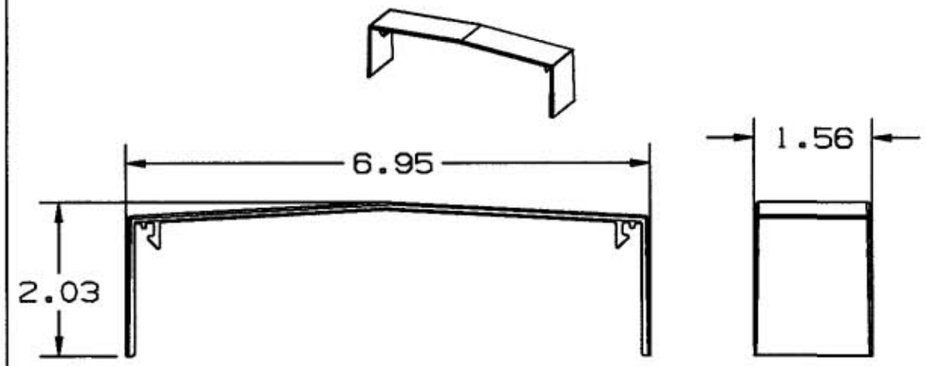

SPLICE COVER PS3SC

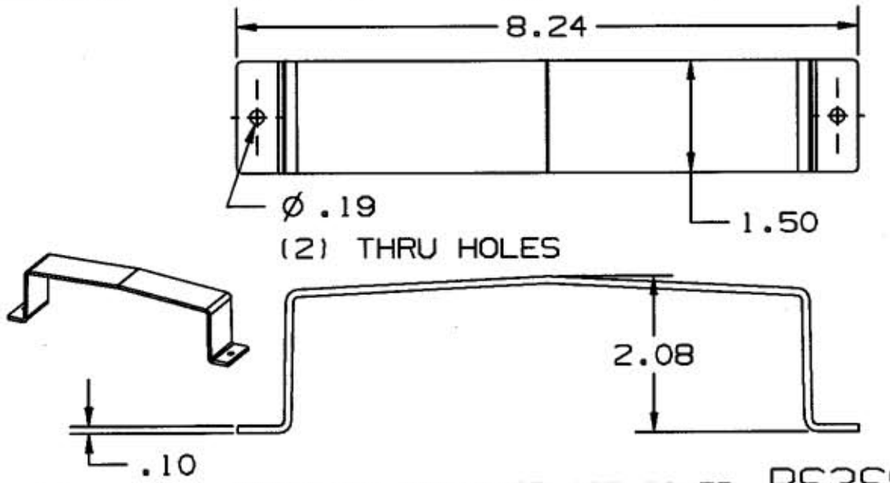

CODE 74545

SECURITY STRAP/SPLICE COVER PS3SS

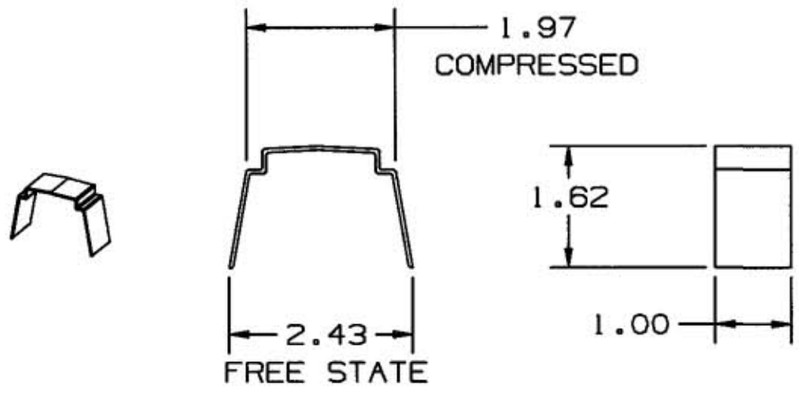

WIRE RETAINING CLIP PS3WC

LIST OF PARTS

DESCRIPTION	MATERIAL	FINISH
RACEWAY COVER	PVC	OFFICE WHITE
RACEWAY BASE	PVC	OFFICE WHITE
END CAP	PVC	OFFICE WHITE
SURFACE PANEL CONNECTOR	PVC	OFFICE WHITE
SPLICE COVER	PVC	OFFICE WHITE
SECURITY STRAP/SPLICE COVER	PVC	OFFICE WHITE
WIRE RETAINING CLIP	PVC	OFFICE WHITE

SYM	REVISIONS	APP	DATE
1	RELEASED PER DCN 7454	SRE	2/14/00

THE DESIGN AND DIMENSIONS OF THE PRODUCT SHOWN ON THIS DRAWING ARE SUBJECT TO CHANGE WITHOUT NOTICE

TITLE
RACEWAY & FITTINGS

TOLERANCES UNLESS OTHERWISE SPECIFIED
FRACTIONS ±1/64
DECIMALS ±.005
ANGLES ±2°

WIRING DEVICE-KELLEMS
HUBBELL INCORPORATED
BRIDGEPORT, CT

DR. BY SRE	APP. BY SRE
TR. BY	SCALE ---
CHK'D BY SRE	DATE 4/27/99

DIMENSION SHEET FOR CAT. NO.
REPAIRABLE ☐ NON-REPAIRABLE ☒
B
M-8060
1