Floor Boxes
Accessories
Covers



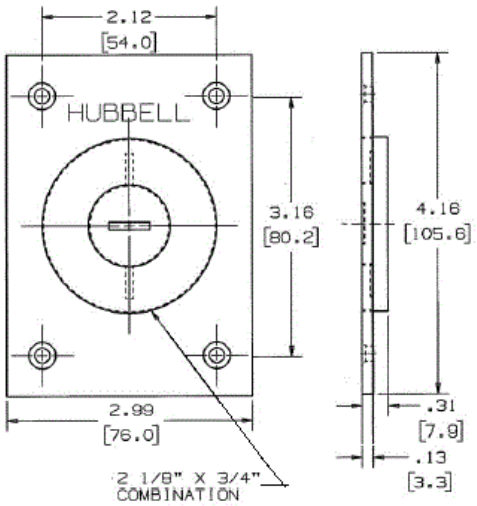

Ordering Information

Description	Material	UPC	Catalog Number
One cover required per	Brass	783585118802	S2425

Specifications

Cover Style	Rectangular
Cover Finish	Brass
Cover Opening	2 1/8" x 3/4"
Dimensions	4.15" x 2.99"

Online Resources

Customer Use Drawing
eCatalog
Installation Instructions

Dimensions in Inches (mm)

Wiring Device-Kellems