

TOP VIEW

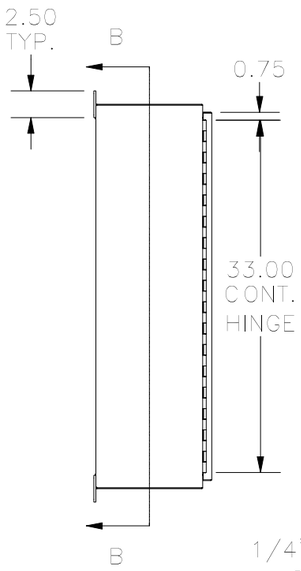

LEFT SIDE VIEW

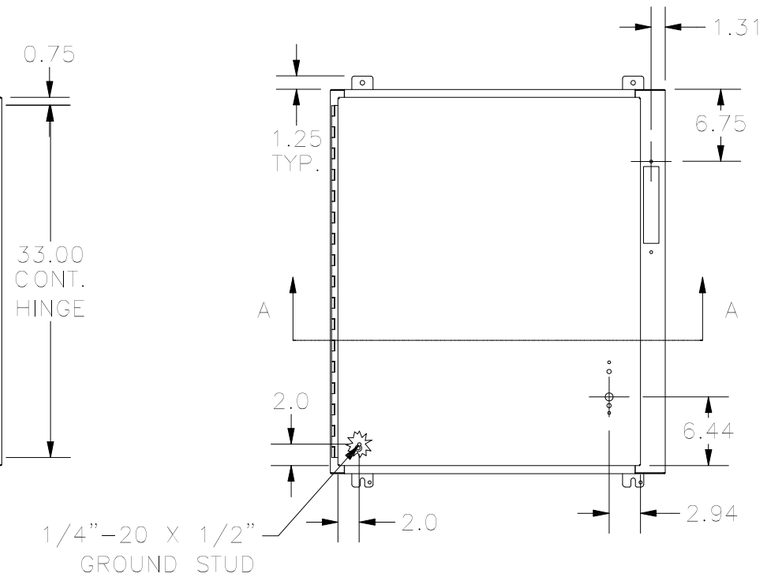

FRONT VIEW

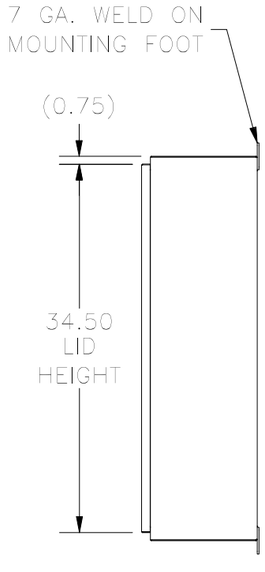

RIGHT SIDE VIEW

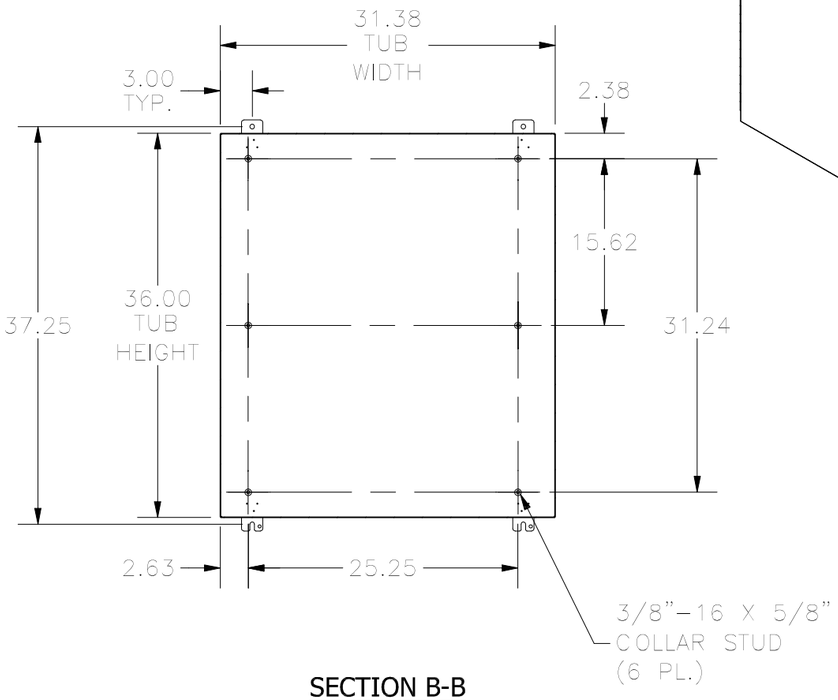

SECTION B-B
(INSIDE BACK OF ENCLOSURE)

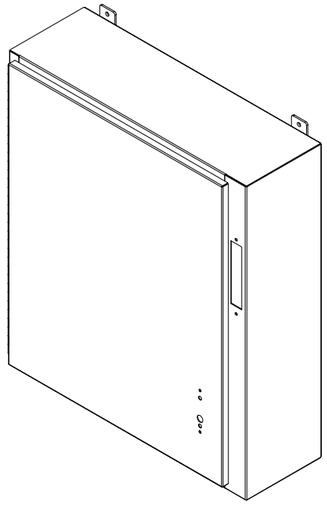

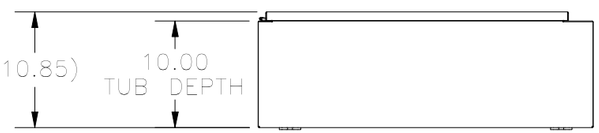

BOTTOM VIEW

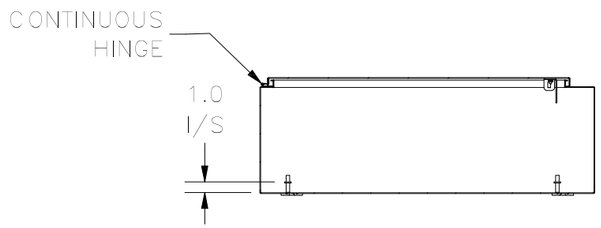

SECTION A-A
(INSIDE TOP OF ENCLOSURE)

PART#: ABN12363110
(DATA SUBJECT TO CHANGE WITHOUT NOTICE)

THIS DRAWING IS PROPERTY OF HUBBELL INC. WIEGMANN
ALL INFORMATION IS PROPRIETARY AND NOT TO BE DUPLICATED