

LEFT SIDE VIEW

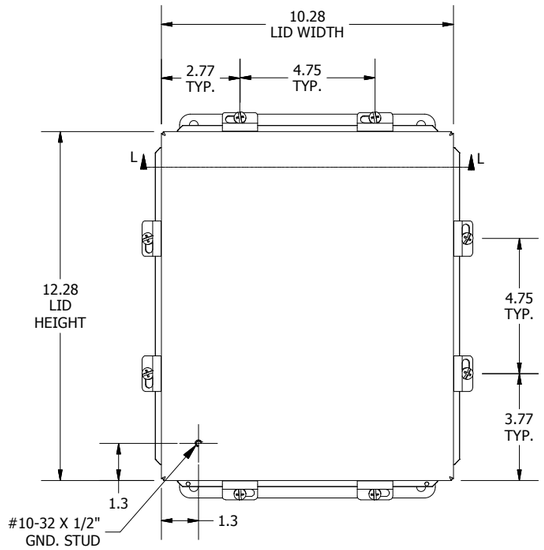

FRONT VIEW

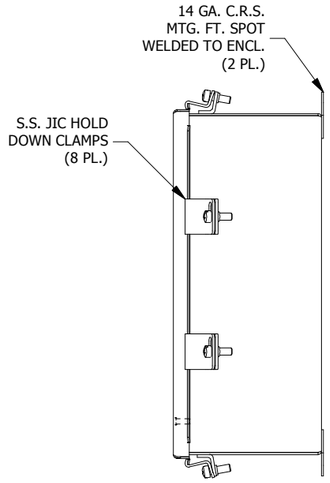

RIGHT SIDE VIEW

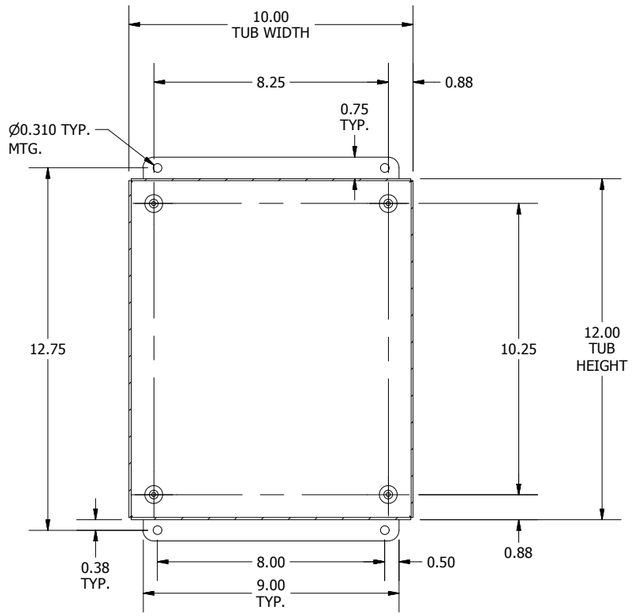

SECTION K-K VIEW
(INSIDE BACK OF ENCL.)

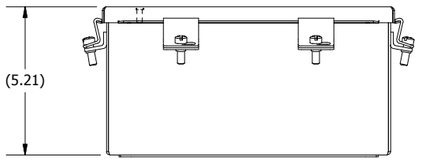

BOTTOM VIEW

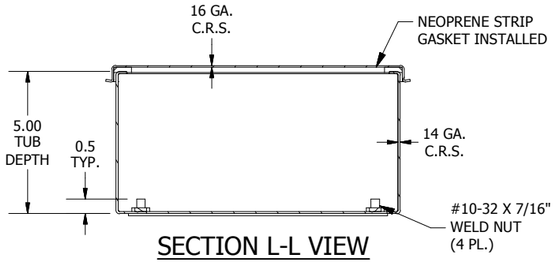

SECTION L-L VIEW
(INSIDE TOP OF ENCL.)

PART#: BN4121005-S
(DATA SUBJECT TO CHANGE WITHOUT NOTICE)

THIS DRAWING IS PROPERTY OF HUBBELL INC. WIEGMANN
ALL INFORMATION IS PROPRIETARY AND NOT TO BE DUPLICATED