

TOP VIEW

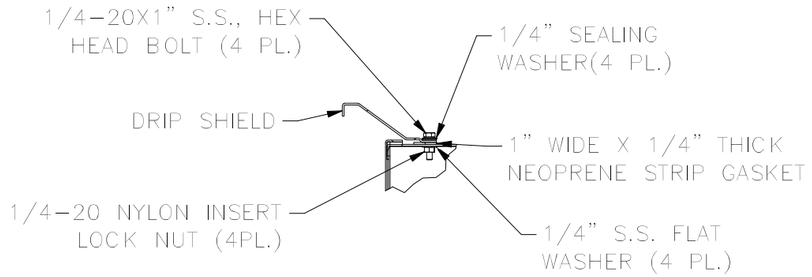

DETAIL A
(DRIP SHIELD INSTALL DETAIL)

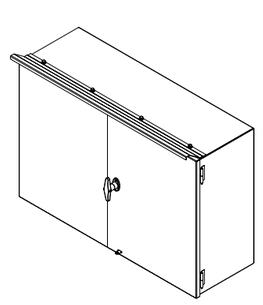

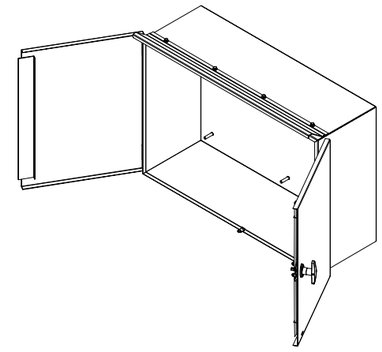

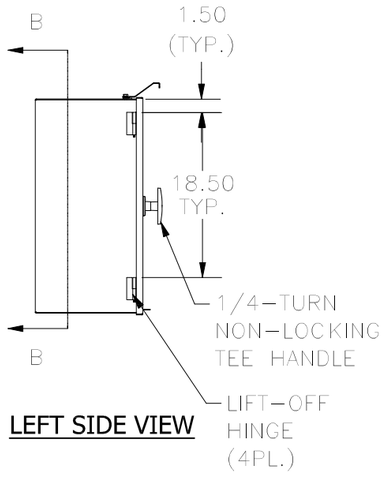

LEFT SIDE VIEW

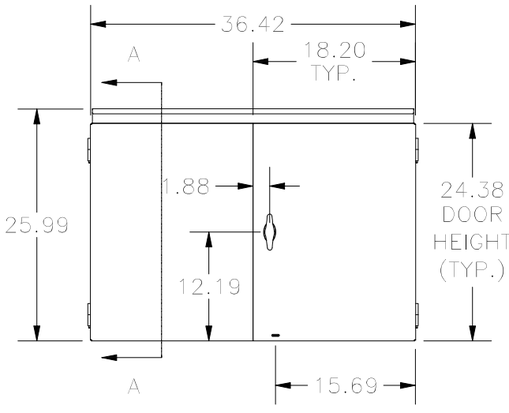

FRONT VIEW

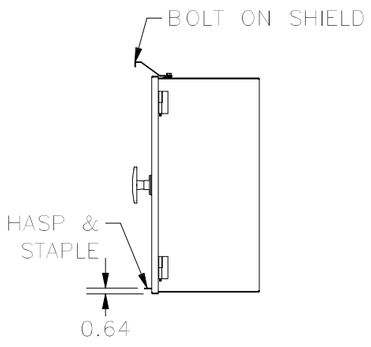

RIGHT SIDE VIEW

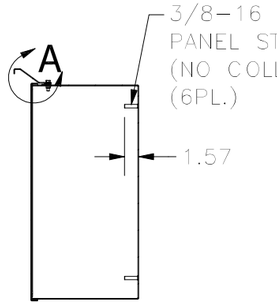

SECTION A-A

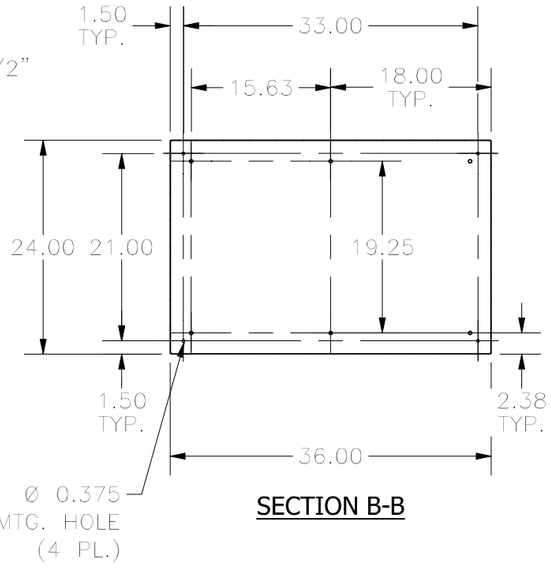

SECTION B-B

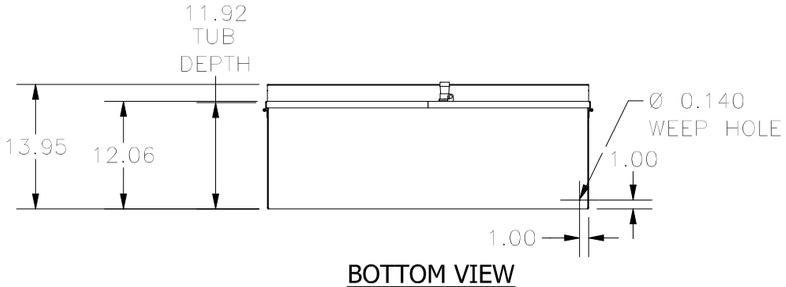

BOTTOM VIEW

PART#: CTDD362412
(DATA SUBJECT TO CHANGE
WITHOUT NOTICE)

THIS DRAWING IS PROPERTY OF HUBBELL INC.
WIEGMANN
ALL INFORMATION IS PROPRIETARY AND NOT TO BE
DUPLICATED