

TOP VIEW

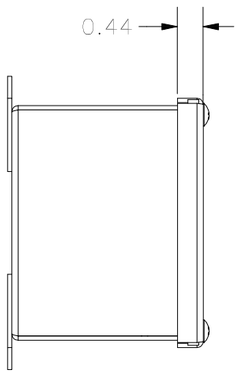

LEFT VIEW

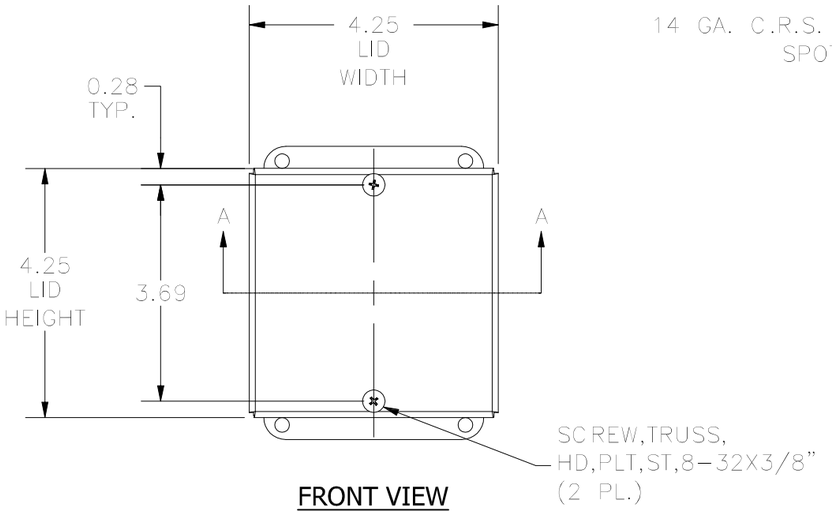

FRONT VIEW

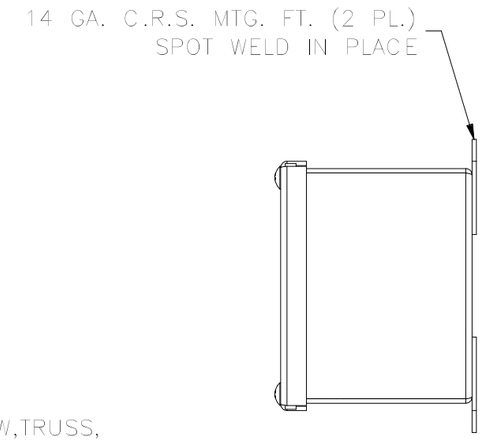

RIGHT VIEW

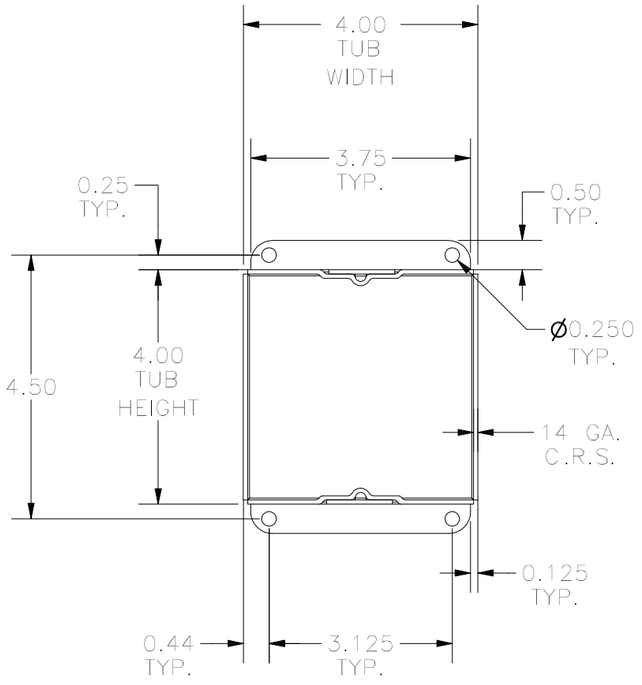

VIEW SHOWING COVER REMOVED

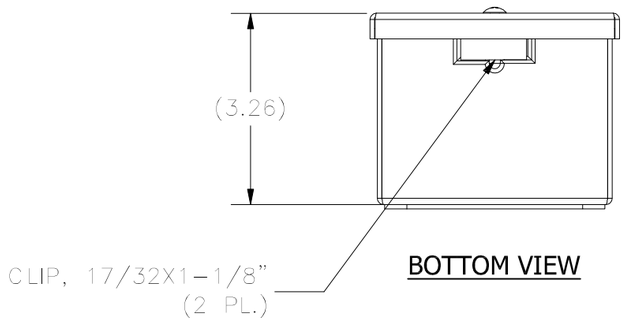

BOTTOM VIEW

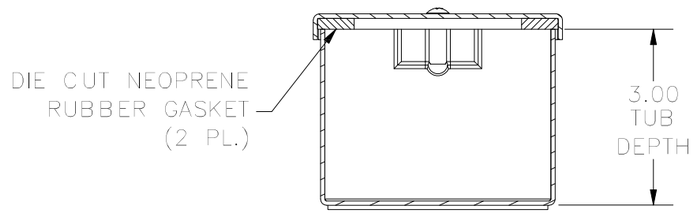

SECTION A-A

PART#: JIC040403
(DATA SUBJECT TO CHANGE WITHOUT NOTICE)

THIS DRAWING IS PROPERTY OF HUBBELL INC. WIEGMANN
ALL INFORMATION IS PROPRIETARY AND NOT TO BE DUPLICATED