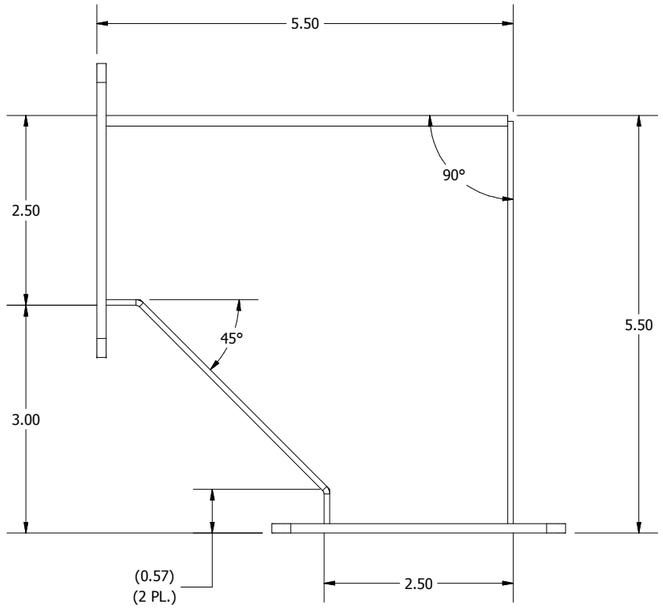

TOP VIEW

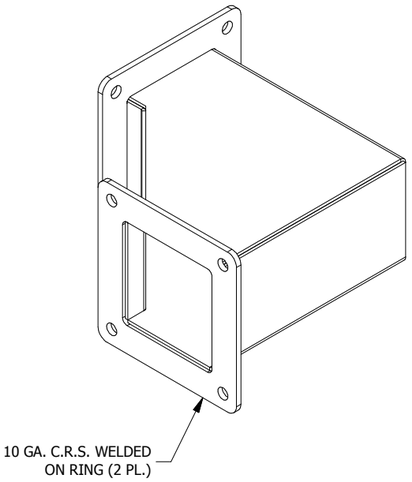

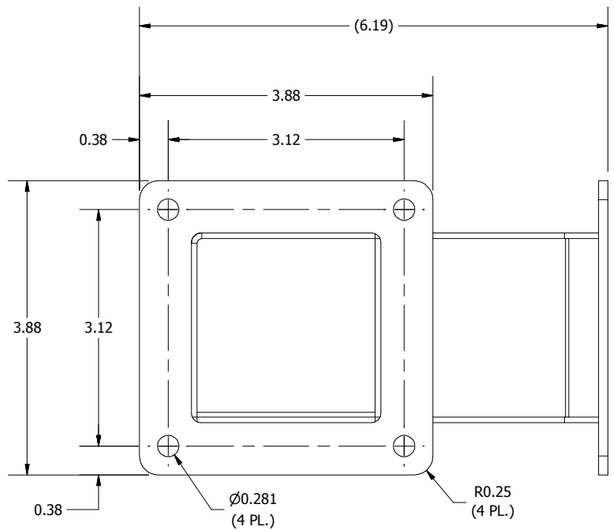

RIGHT SIDE VIEW

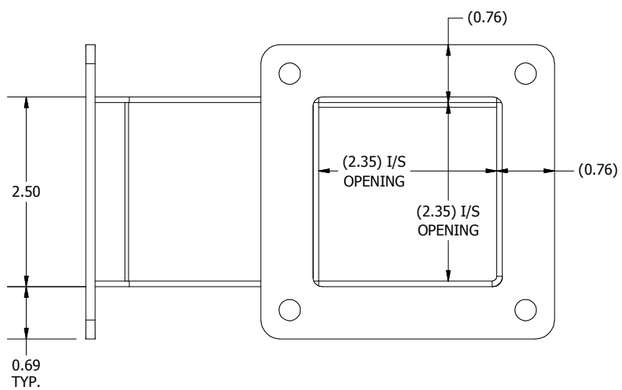

FRONT VIEW

PART#: JWL902
(DATA SUBJECT TO CHANGE WITHOUT NOTICE)

THIS DRAWING IS PROPERTY OF HUBBELL INC. WIEGMANN
ALL INFORMATION IS PROPRIETARY AND NOT TO BE DUPLICATED