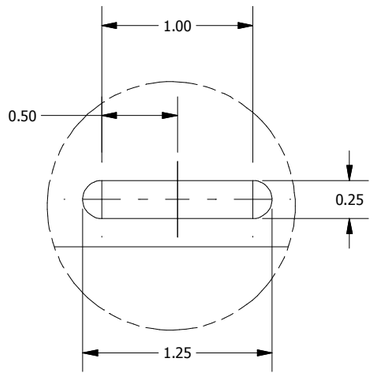

DETAIL A (8 PL.)
(SLOT DETAIL)

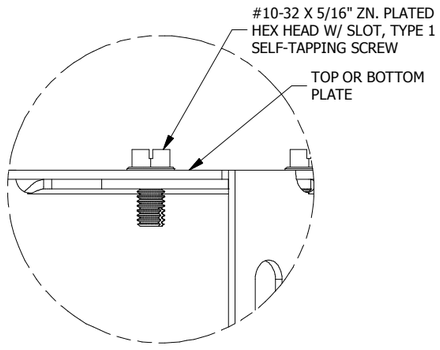

DETAIL B (6 PL.)
(ASSM. DETAIL)

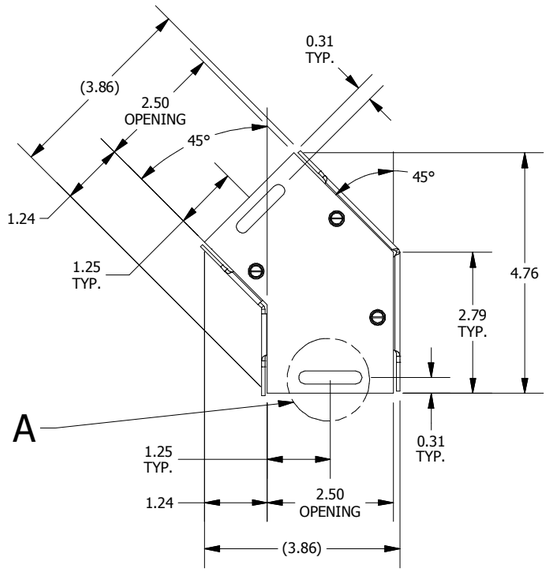

TOP VIEW

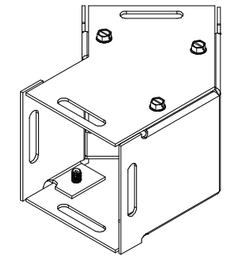

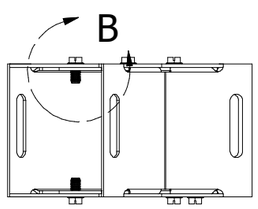

SIDE VIEW

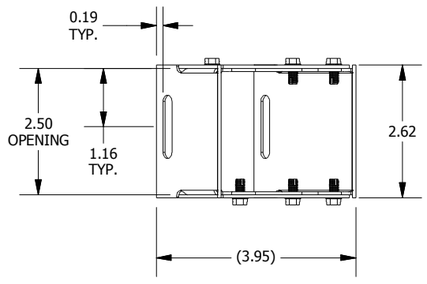

FRONT VIEW

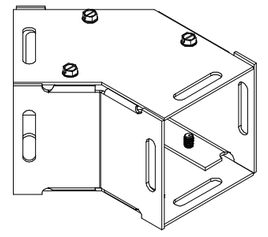

PART#: L020245
(DATA SUBJECT TO CHANGE WITHOUT NOTICE)

THIS DRAWING IS PROPERTY OF HUBBELL INC. WIEGMANN
ALL INFORMATION IS PROPRIETARY AND NOT TO BE DUPLICATED