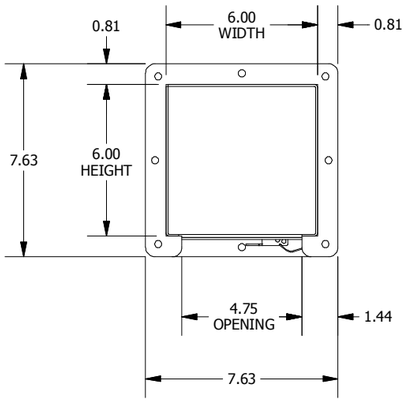

LEFT SIDE VIEW

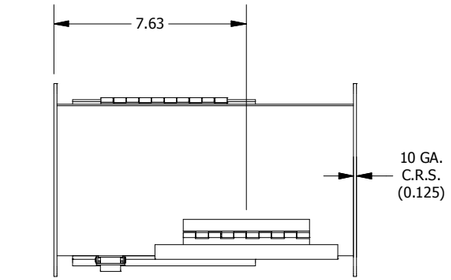

TOP VIEW

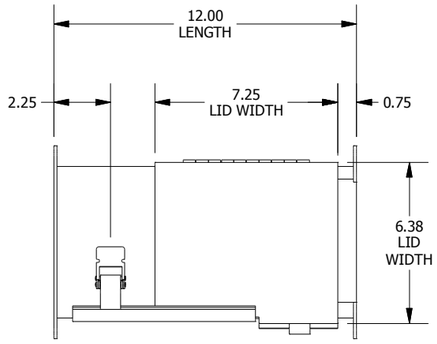

FRONT VIEW

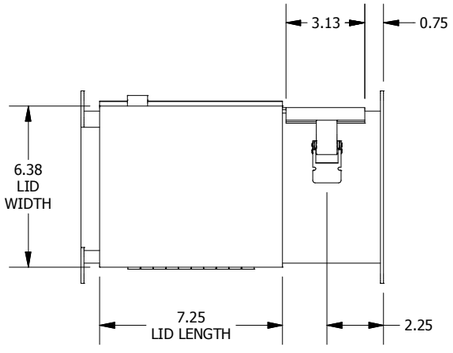

BOTTOM VIEW

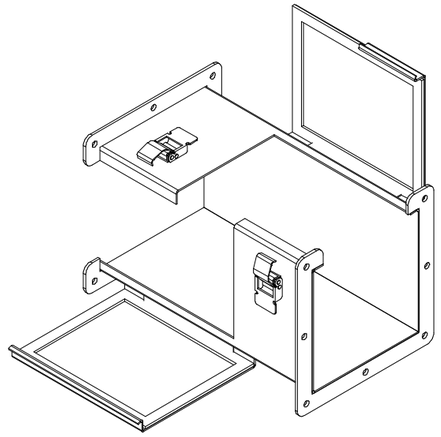

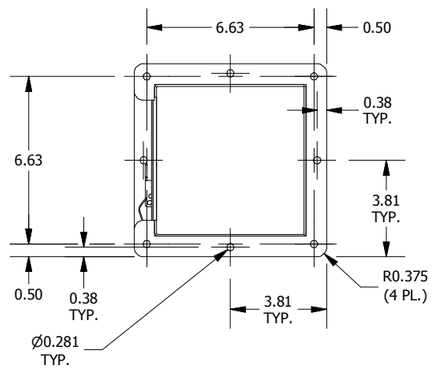

RIGHT SIDE VIEW

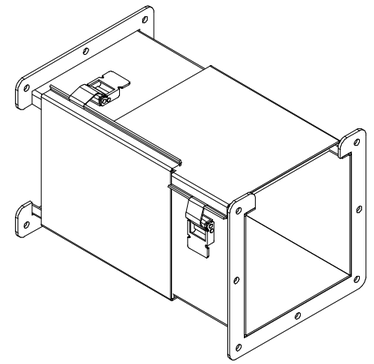

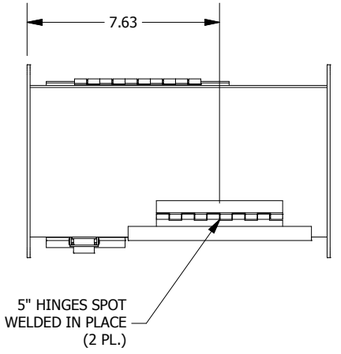

BACK VIEW

PART#: LJW61CCW
(DATA SUBJECT TO CHANGE WITHOUT NOTICE)

THIS DRAWING IS PROPERTY OF HUBBELL INC. WIEGMANN
ALL INFORMATION IS PROPRIETARY AND NOT TO BE DUPLICATED