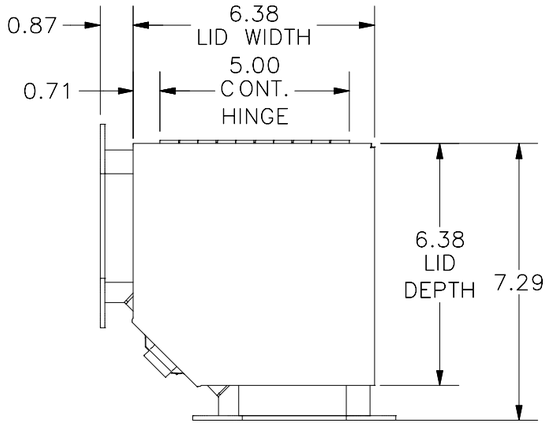

TOP VIEW

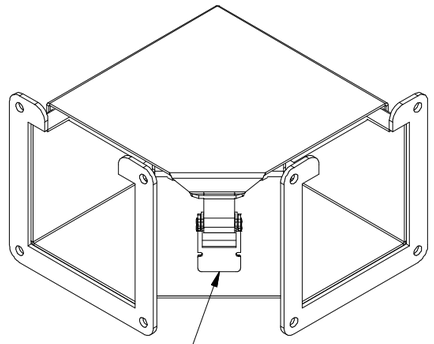

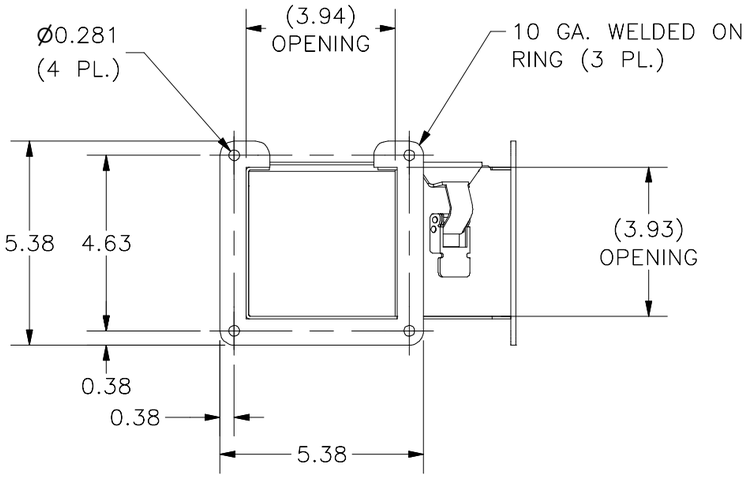

FRONT VIEW

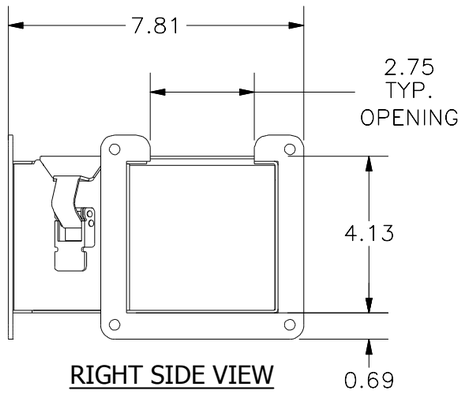

RIGHT SIDE VIEW

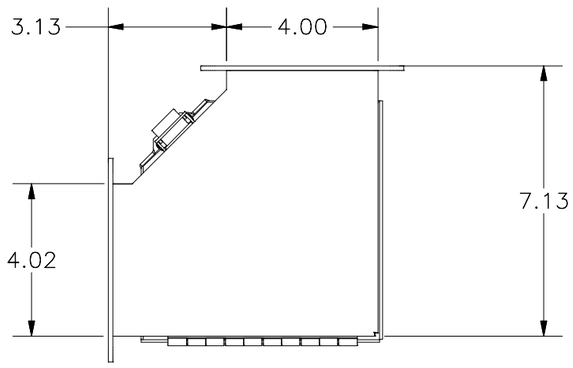

BOTTOM VIEW

PART#: LJWL904A
(DATA SUBJECT TO CHANGE WITHOUT NOTICE)

THIS DRAWING IS PROPERTY OF HUBBELL INC. WIEGMANN
ALL INFORMATION IS PROPRIETARY AND NOT TO BE DUPLICATED