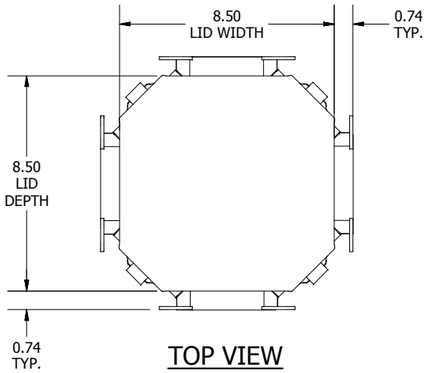

TOP VIEW

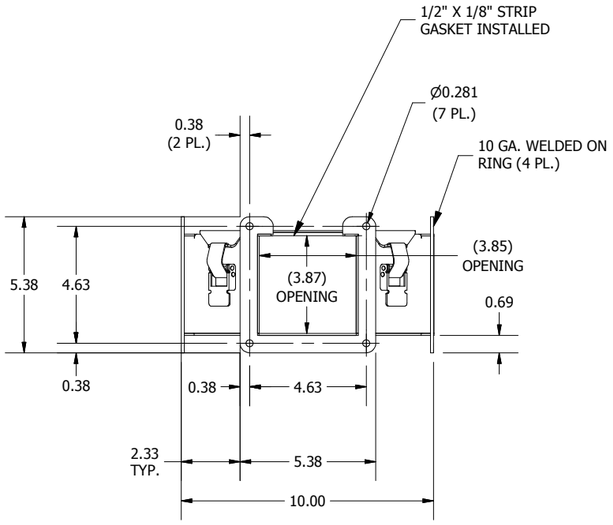

LEFT SIDE VIEW

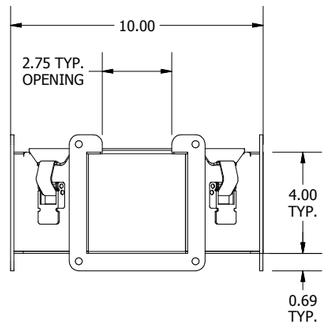

FRONT VIEW

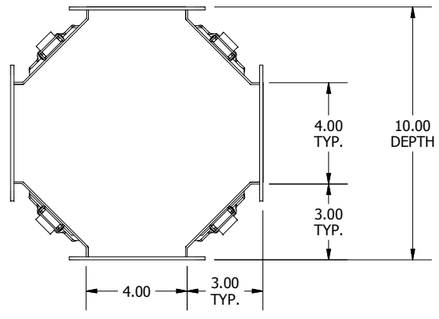

BOTTOM VIEW

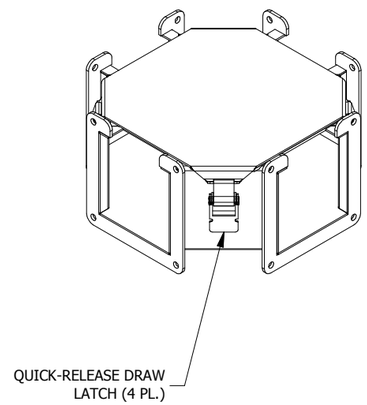

PART#: LJWX4
(DATA SUBJECT TO CHANGE WITHOUT NOTICE)

THIS DRAWING IS PROPERTY OF HUBBELL INC. WIEGMANN
ALL INFORMATION IS PROPRIETARY AND NOT TO BE DUPLICATED