

TOP VIEW

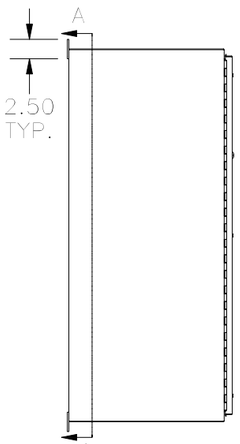

LEFT SIDE

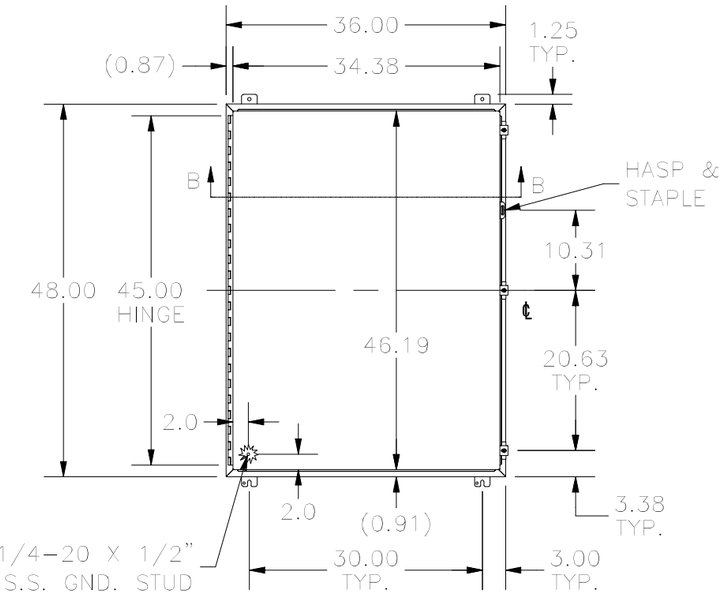

FRONT VIEW

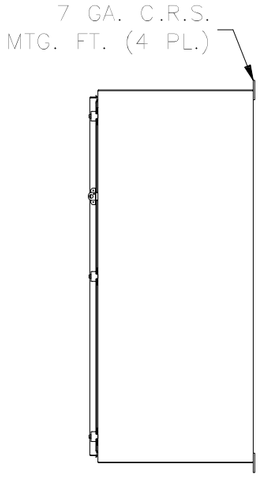

RIGHT SIDE

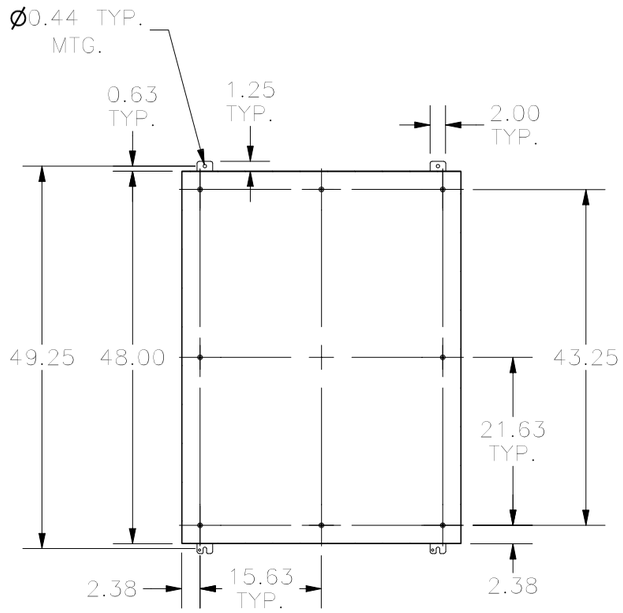

SECTION A-A
(INSIDE BACK OF TUB)

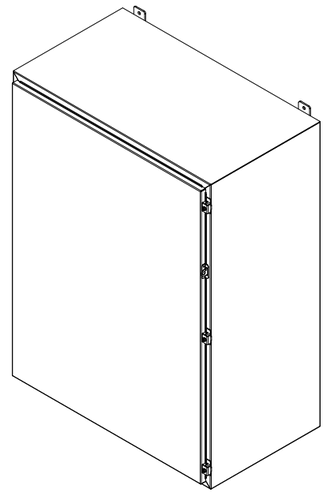

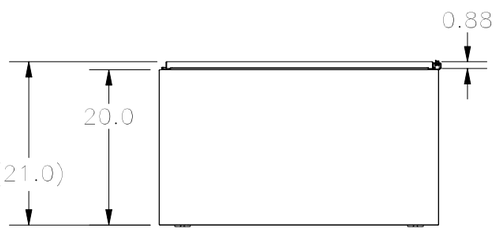

BOTTOM VIEW

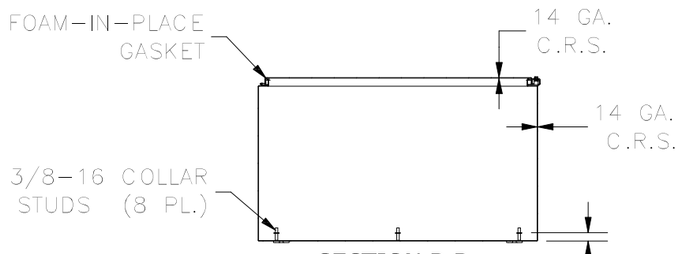

SECTION B-B
(INSIDE TOP OF ENCLOSURE)

PART#: N12483620
(DATA SUBJECT TO CHANGE WITHOUT NOTICE)

THIS DRAWING IS PROPERTY OF HUBBELL INC. WIEGMANN
ALL INFORMATION IS PROPRIETARY AND NOT TO BE DUPLICATED