


TOP VIEW

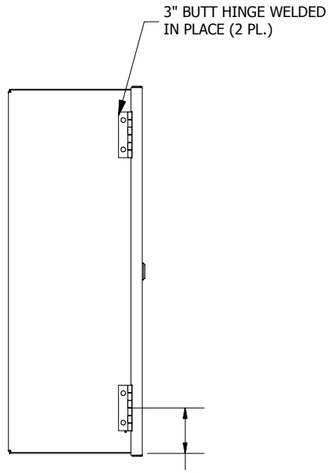


LEFT SIDE VIEW

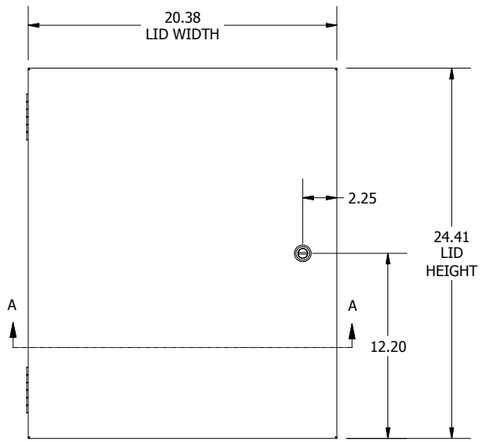


FRONT VIEW

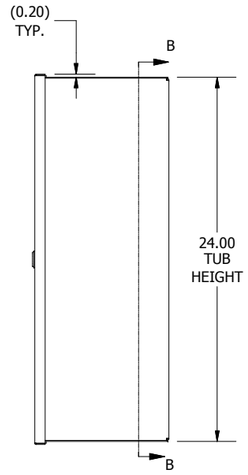


RIGHT SIDE VIEW

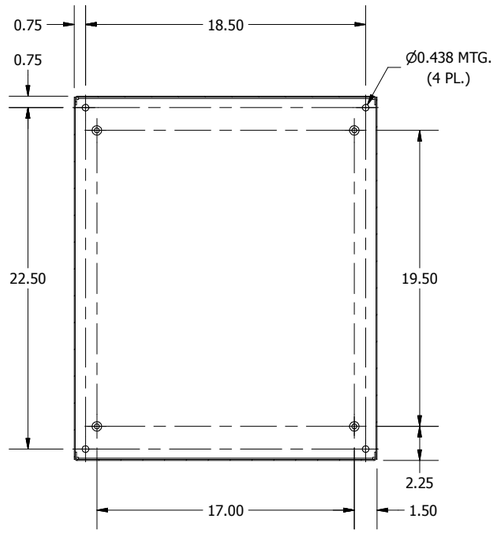


SECTION B-B
(INSIDE BACK OF ENCL.)

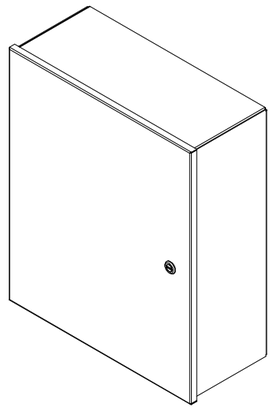

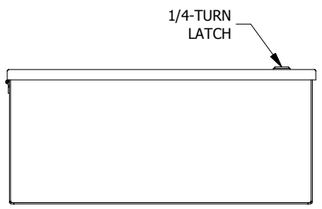


BOTTOM VIEW

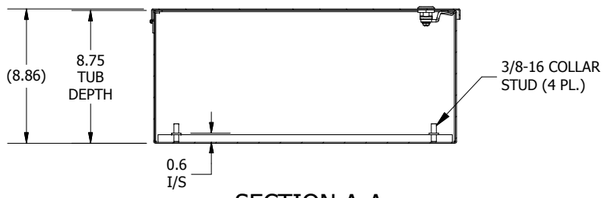


SECTION A-A
(INSIDE TOP OF ENCL.)

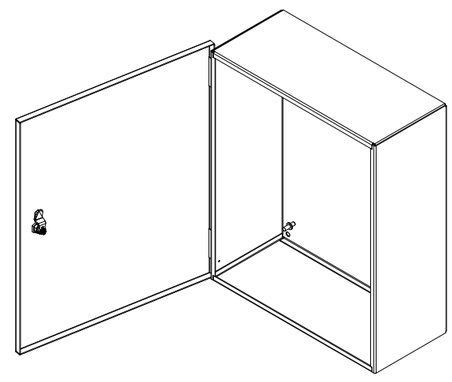

# PART#: HWDN1C202408LP
# (DATA SUBJECT TO CHANGE WITHOUT NOTICE)

THIS DRAWING IS PROPERTY OF HUBBELL INC. WIEGMANN
ALL INFORMATION IS PROPRIETARY AND NOT TO BE DUPLICATED