

TOP VIEW

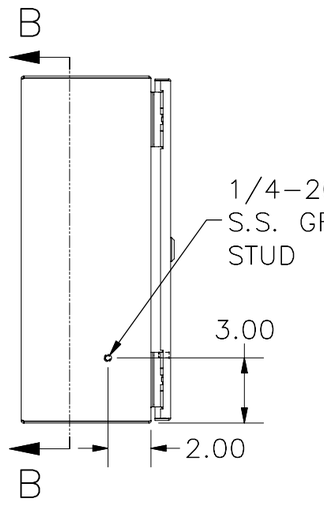

LEFT SIDE VIEW

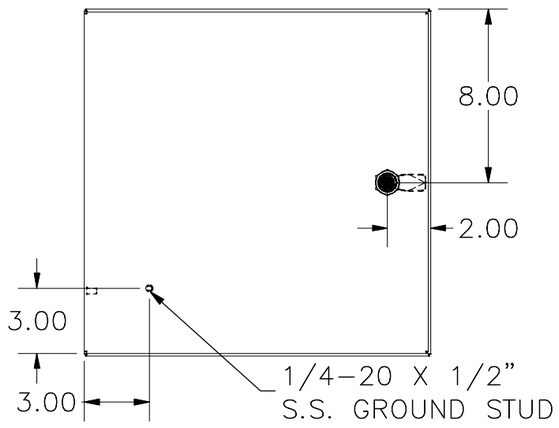

FRONT VIEW

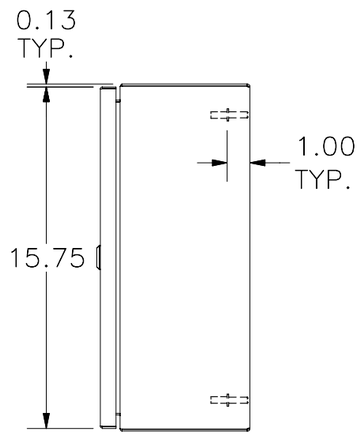

RIGHT SIDE VIEW

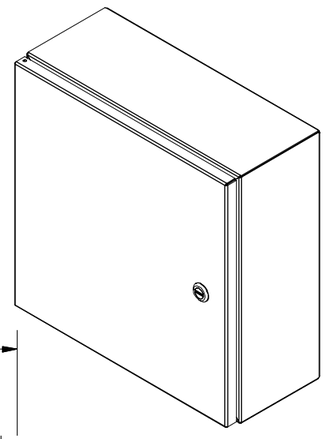

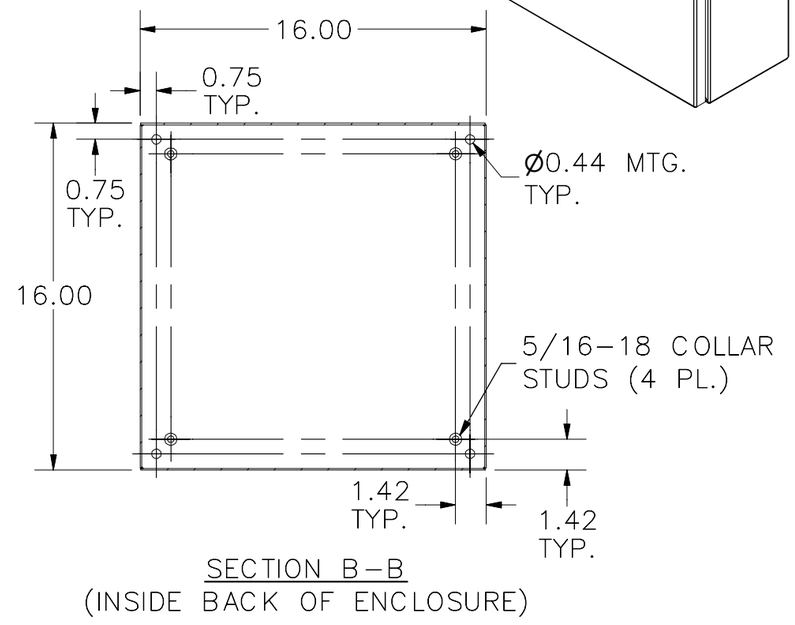

SECTION B–B
(INSIDE BACK OF ENCLOSURE)

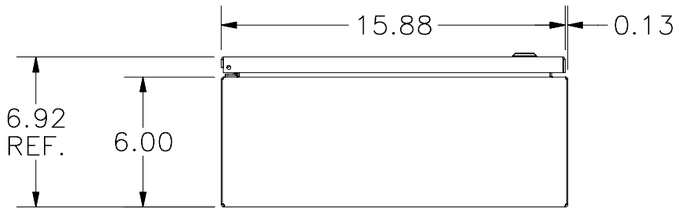

BOTTOM VIEW

PART#: N412161606CLG
(DATA SUBJECT TO CHANGE WITHOUT NOTICE)