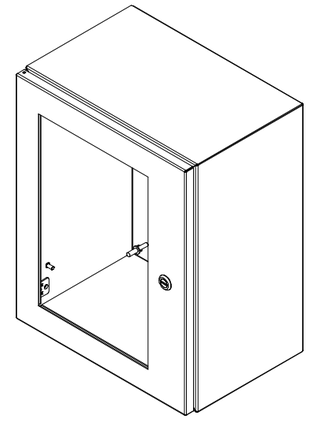

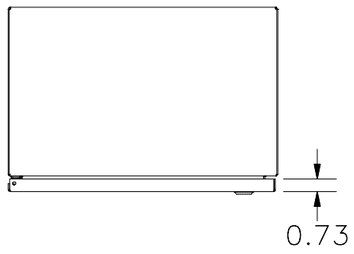

TOP VIEW

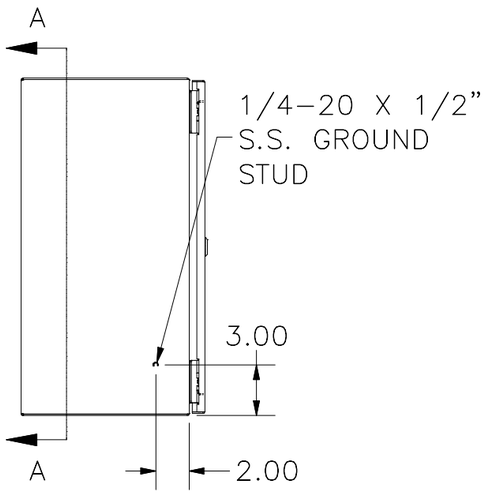

LEFT SIDE VIEW

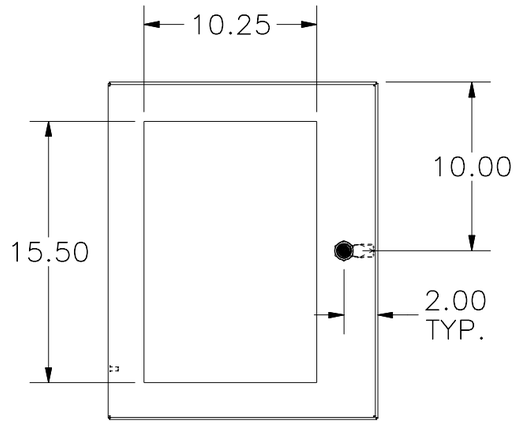

FRONT VIEW

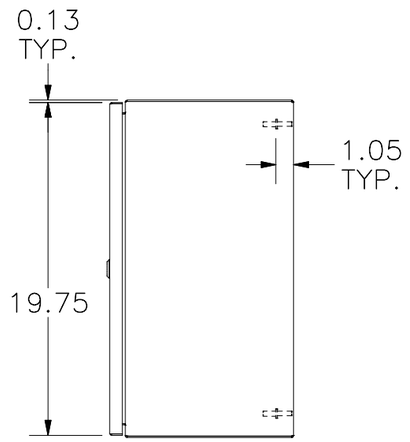

RIGHT SIDE VIEW

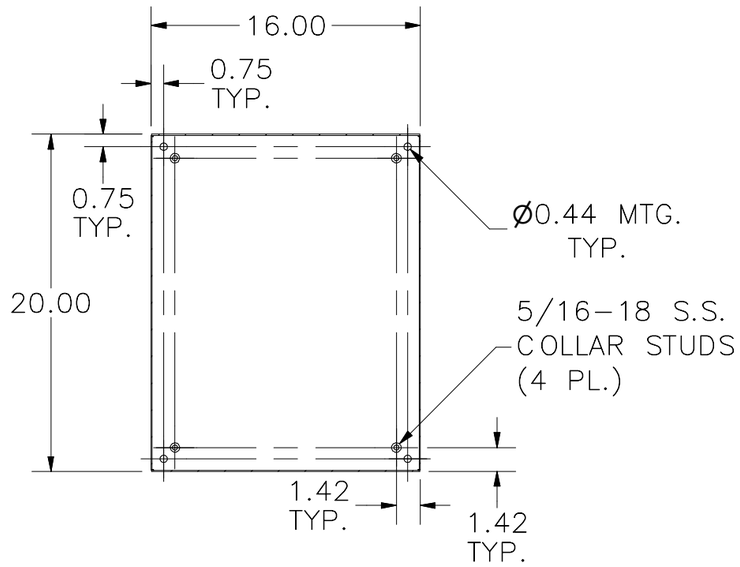

SECTION A–A

(INSIDE BACK OF ENCLOSURE)

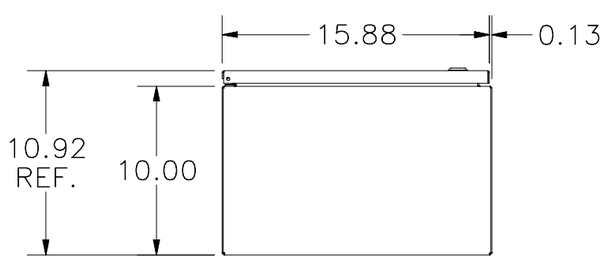

BOTTOM VIEW

PART#: N412201610WCLG
(DATA SUBJECT TO CHANGE WITHOUT NOTICE)