

TOP VIEW

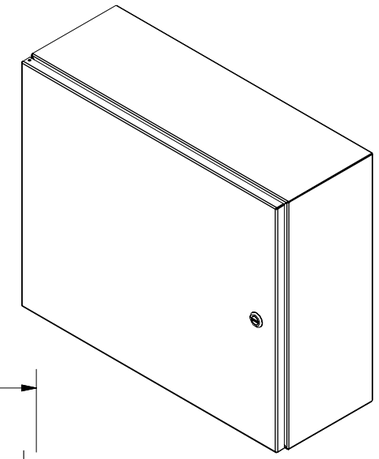

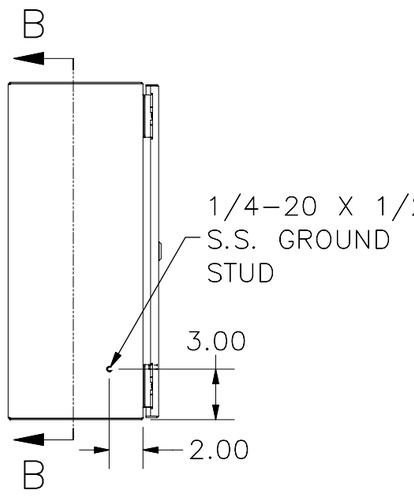

LEFT SIDE VIEW

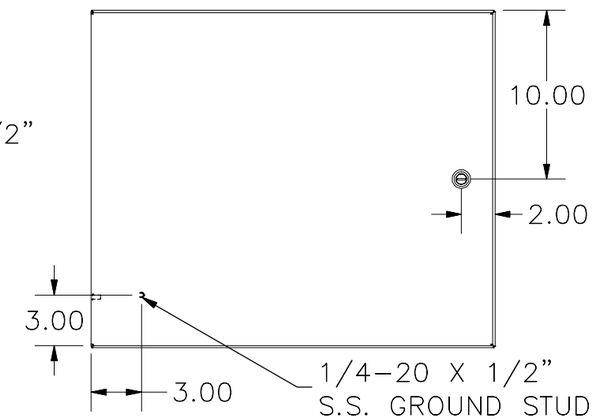

FRONT VIEW

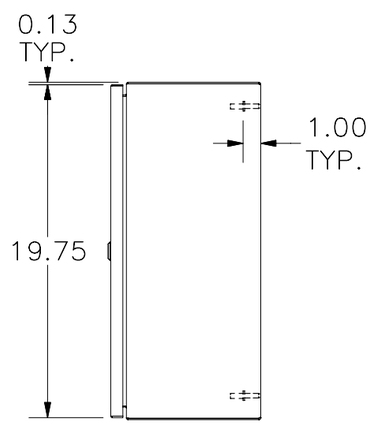

RIGHT SIDE VIEW

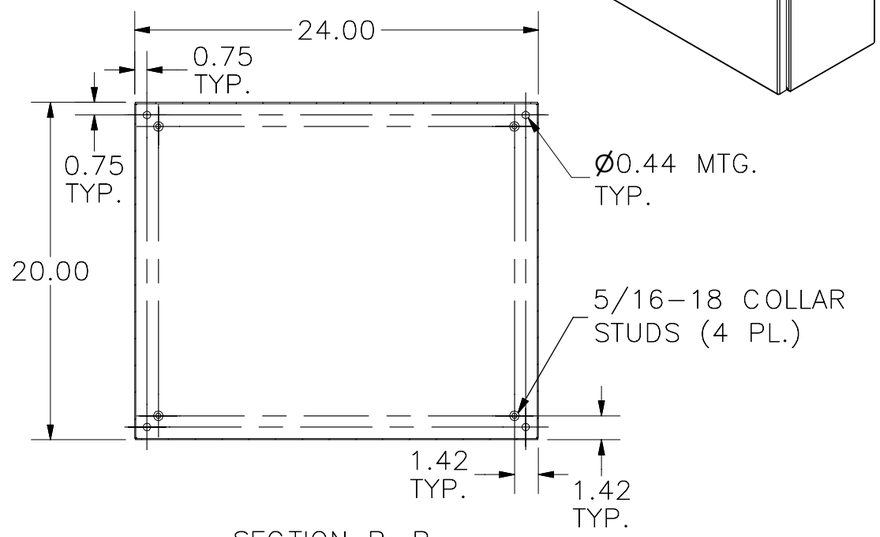

SECTION B–B
(INSIDE BACK OF ENCLOSURE)

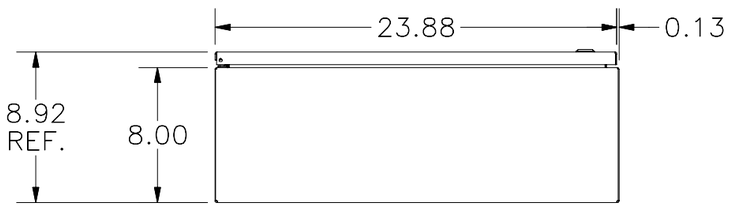

BOTTOM VIEW

PART#: N412202408CLG
(DATA SUBJECT TO CHANGE WITHOUT NOTICE)