

TOP VIEW

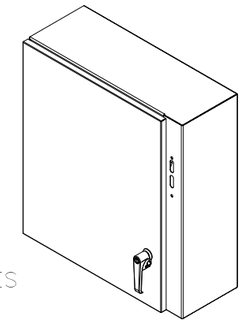

REF. VIEW
(DOOR CLOSED)

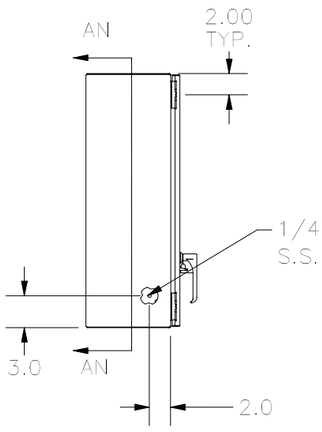

LEFT SIDE VIEW

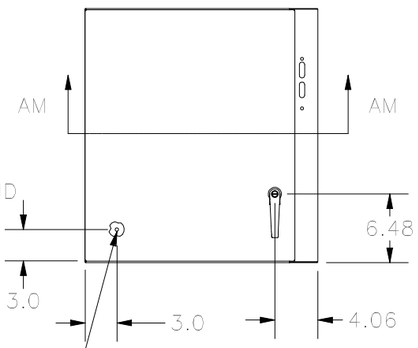

FRONT VIEW

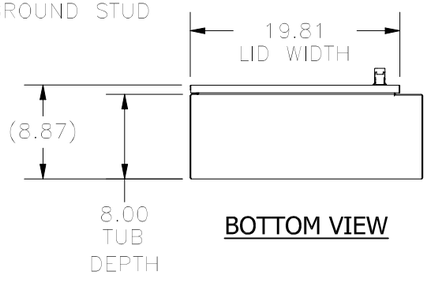

BOTTOM VIEW

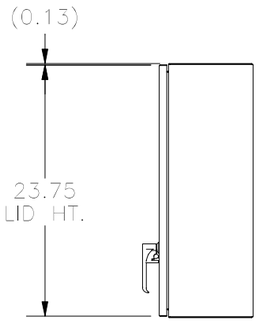

RIGHT SIDE VIEW

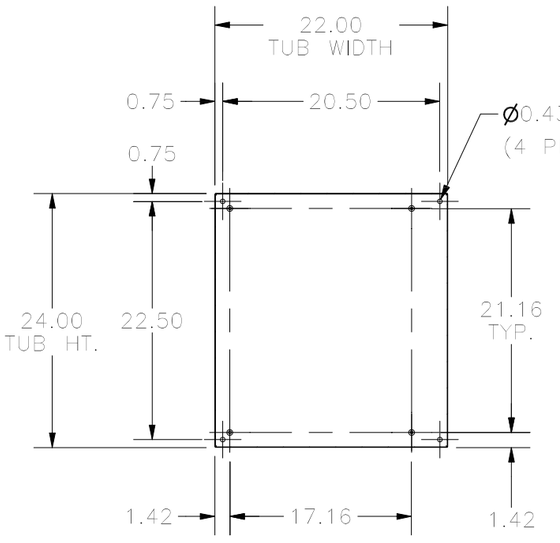

SECTION AN-AN
(INSIDE BACK OF TUB)

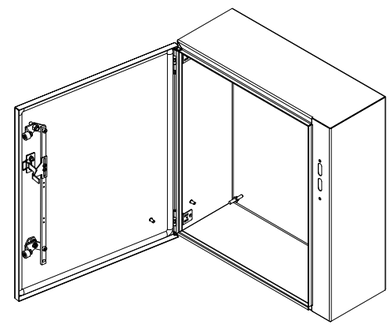

REF. VIEW
(DOOR OPEN)

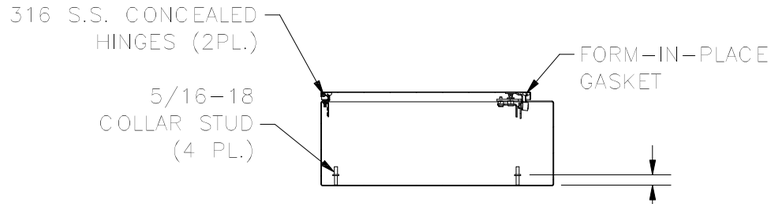

SECTION AM-AM
(INSIDE TOP OF ENCLOSURE)

PART #: N412242208CDSS
(DATA SUBJECT TO CHANGE WITHOUT NOTICE.)

THIS DRAWING IS PROPERTY OF HUBBELL INC. WIEGMANN
ALL INFORMATION IS PROPRIETARY AND NOT TO BE DUPLICATED