

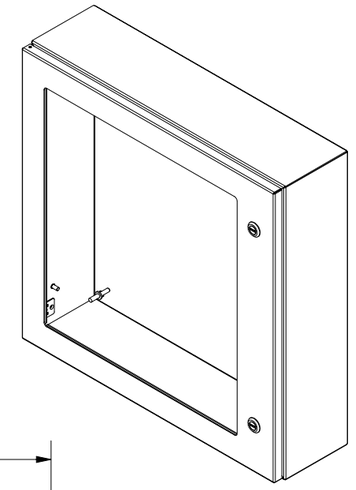

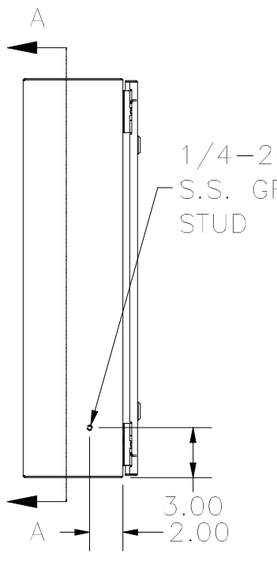

LEFT SIDE VIEW

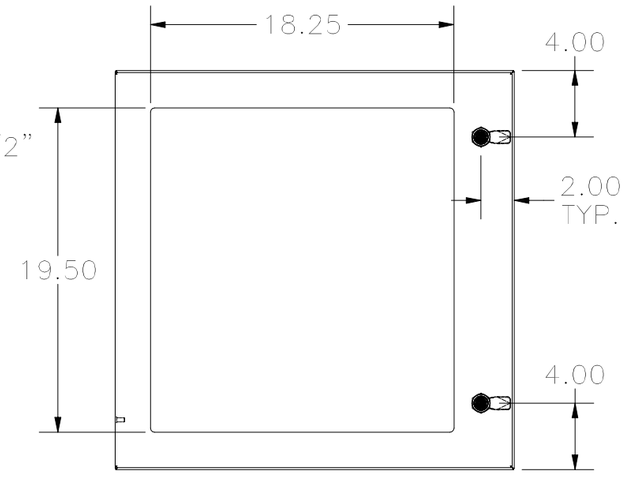

FRONT VIEW

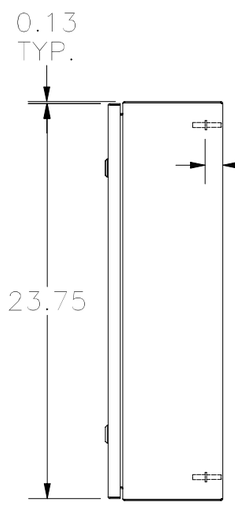

RIGHT SIDE VIEW

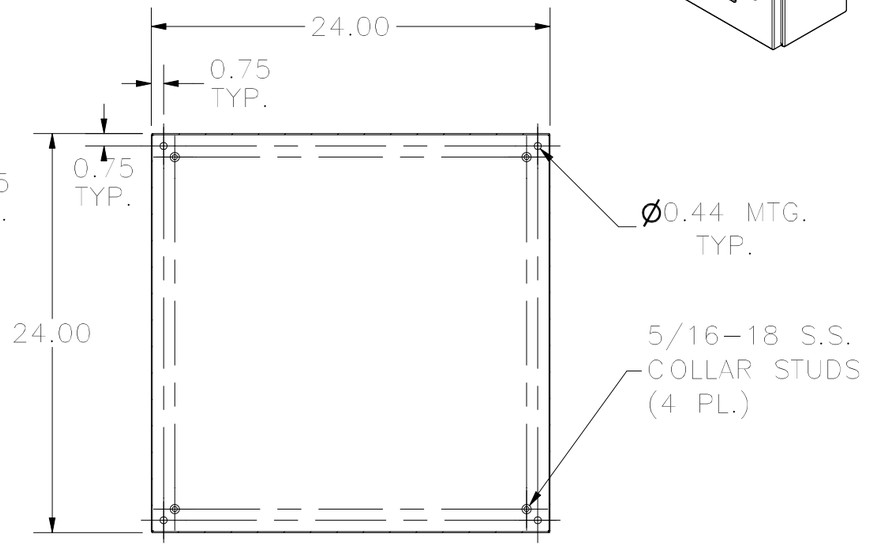

SECTION A–A
(INSIDE BACK OF ENCLOSURE)



BOTTOM VIEW

PART#: N412242406WC
(DATA SUBJECT TO CHANGE WITHOUT NOTICE)

THIS DRAWING IS PROPERTY OF HUBBELL INC. WIEGMANN
ALL INFORMATION IS PROPRIETARY AND NOT TO BE DUPLICATED