

TOP VIEW

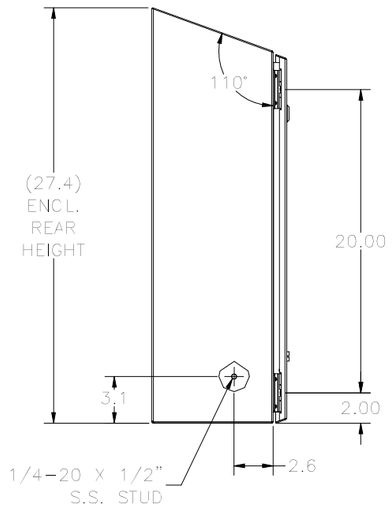

LEFT SIDE VIEW

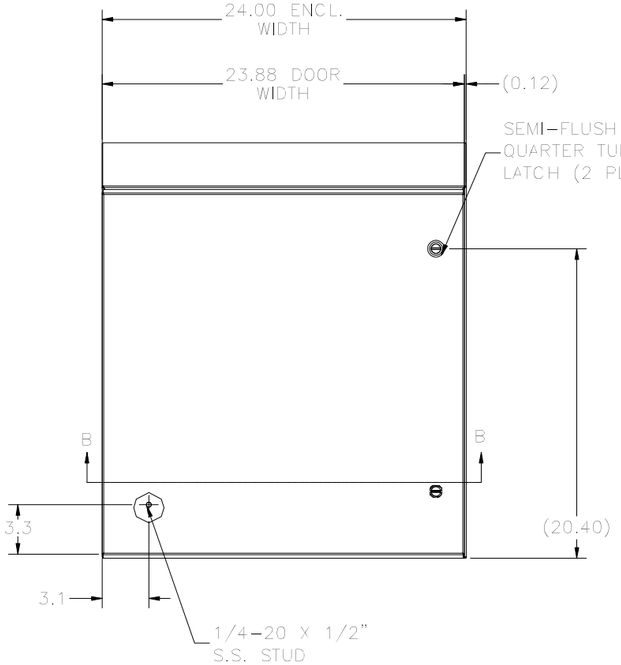

FRONT VIEW

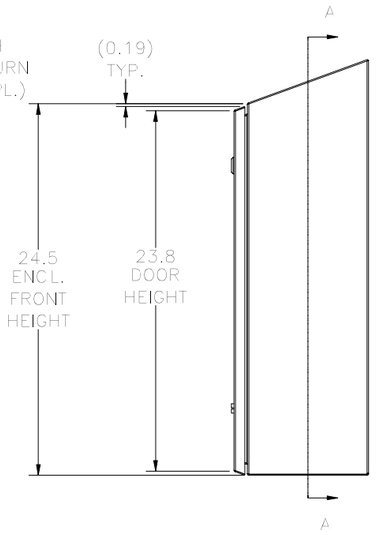

RIGHT SIDE VIEW

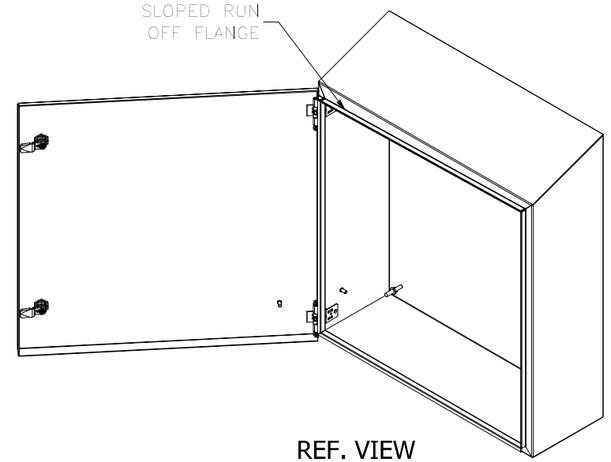

REF. VIEW
(DOOR OPEN)

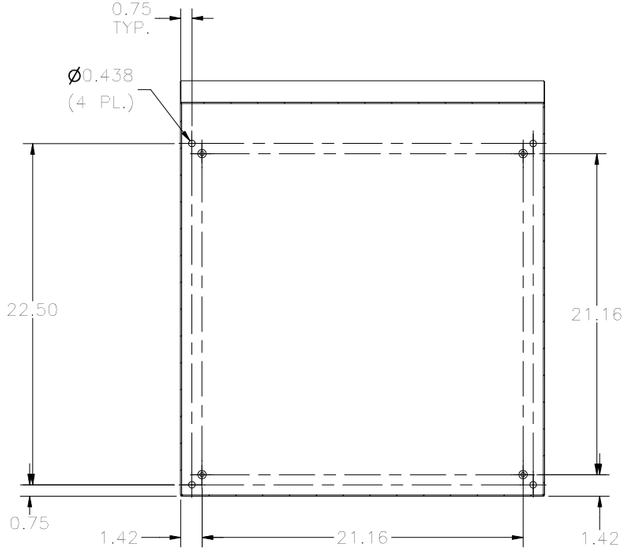

SECTION A-A VIEW
(INSIDE BACK OF ENCL.)

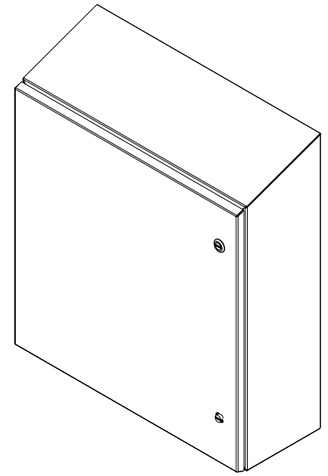

REF. VIEW
(DOOR CLOSED)

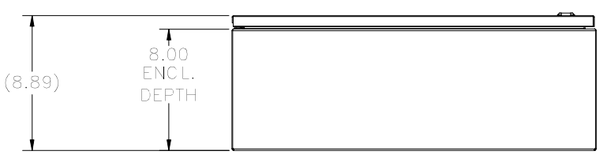

BOTTOM VIEW

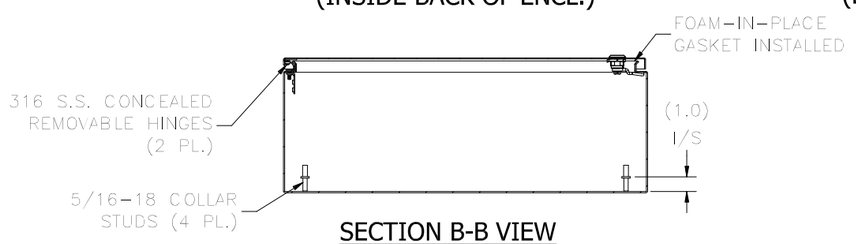

SECTION B-B VIEW
(INSIDE TOP OF ENCL.)

PART#: N412242408CST
(DATA SUBJECT TO CHANGE WITHOUT NOTICE)

THIS DRAWING IS PROPERTY OF HUBBELL INC. WIEGMANN
ALL INFORMATION IS PROPRIETARY AND NOT TO BE DUPLICATED