


TOP VIEW

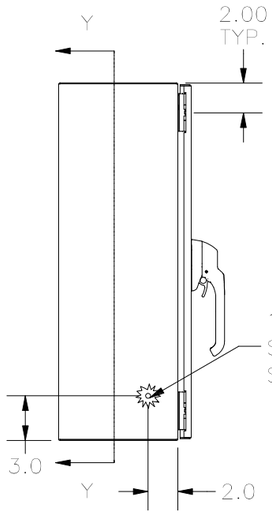


LEFT SIDE VIEW

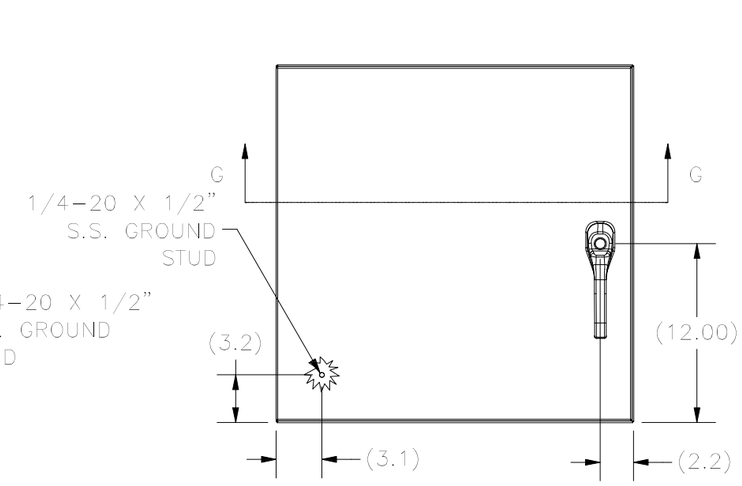


FRONT VIEW

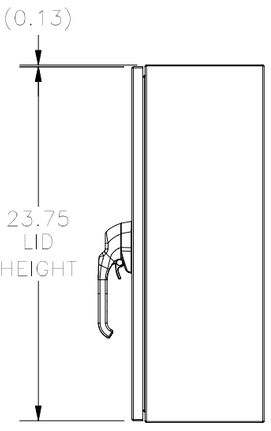


RIGHT SIDE VIEW

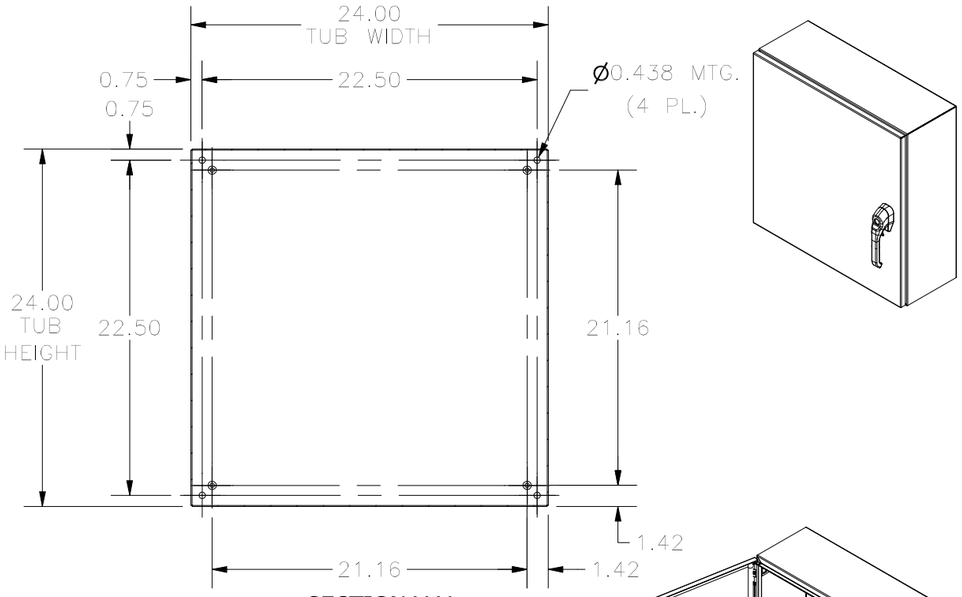


SECTION Y-Y
(INSIDE BACK OF ENCLOSURE)



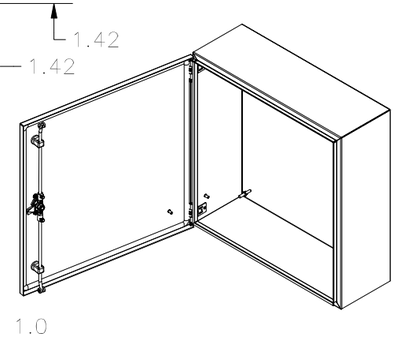

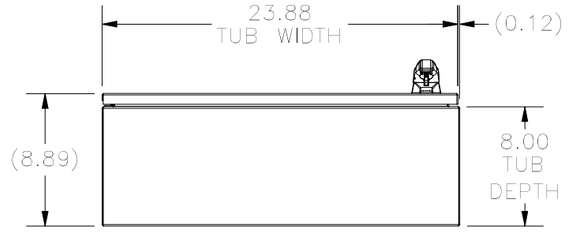


BOTTOM VIEW

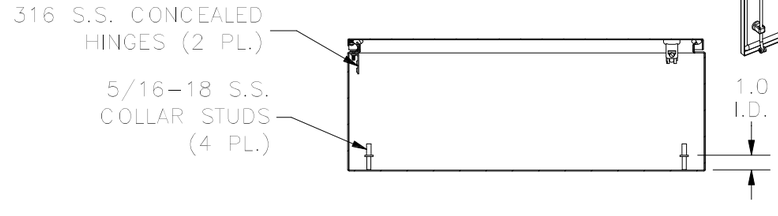


SECTION G-G
(INSIDE TOP OF ENCLOSURE)

PART #: N412242408SSA3PTC
(DATA SUBJECT TO CHANGE WITHOUT NOTICE.)

THIS DRAWING IS PROPERTY OF HUBBELL INC. WIEGMANN
ALL INFORMATION IS PROPRIETARY AND NOT TO BE DUPLICATED