

TOP VIEW

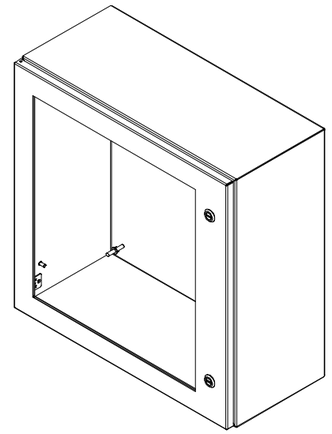

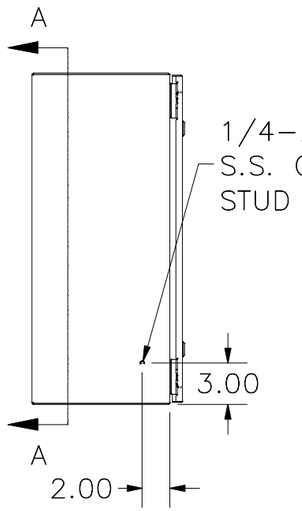

LEFT SIDE VIEW

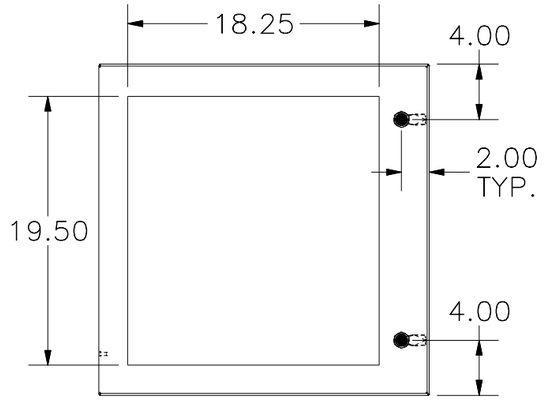

FRONT VIEW

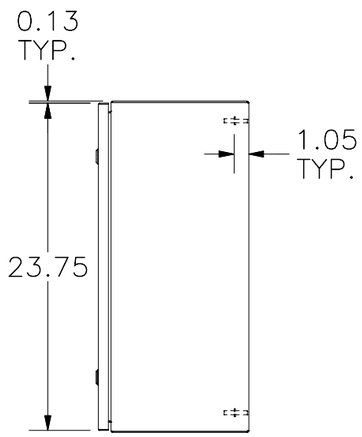

RIGHT SIDE VIEW

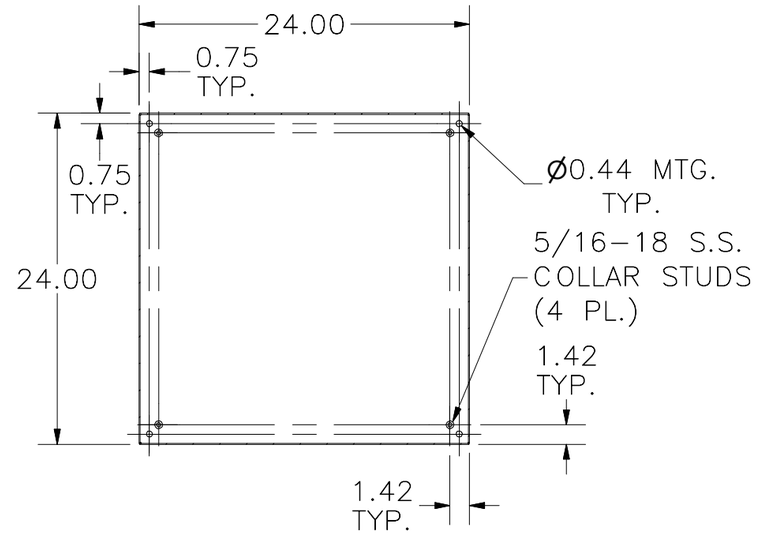

SECTION A–A

(INSIDE BACK OF ENCLOSURE)

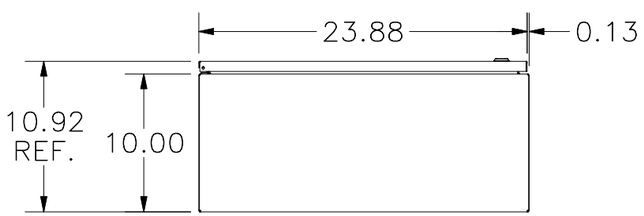

BOTTOM VIEW

PART#: N412242410WCLG
(DATA SUBJECT TO CHANGE WITHOUT NOTICE)