

TOP SIDE VIEW

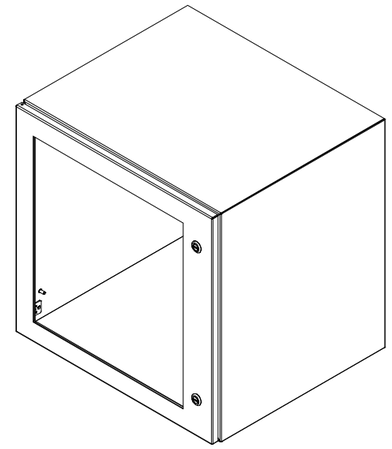

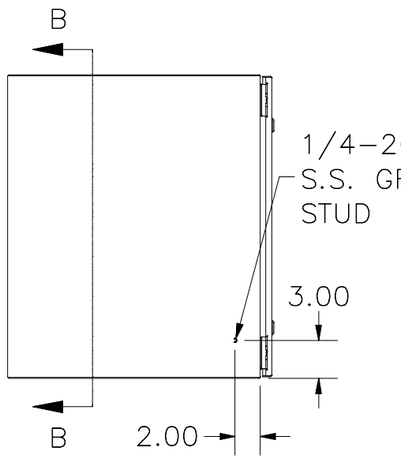

LEFT SIDE VIEW

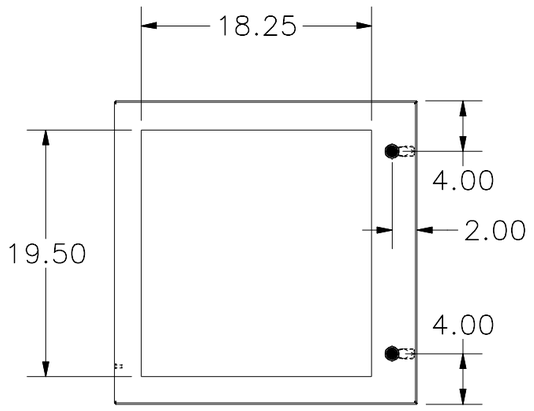

FRONT VIEW

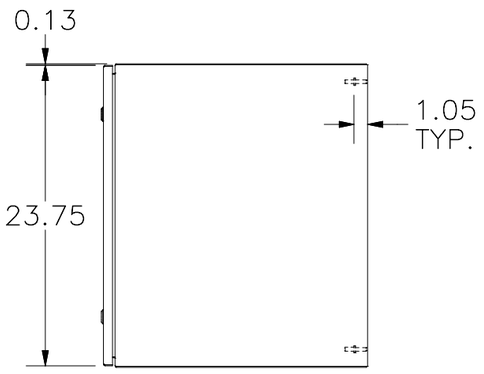

RIGHT SIDE VIEW

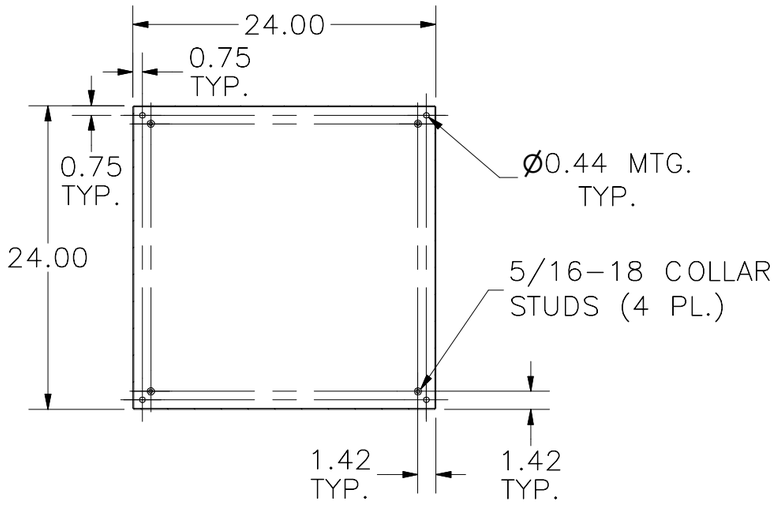

SECTION B–B
(INSIDE BACK OF ENCLOSURE)

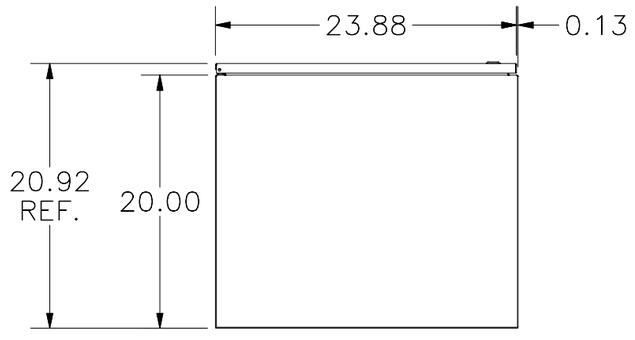

BOTTOM SIDE VIEW

PART#: N412242420WCLG
(DATA SUBJECT TO CHANGE WITHOUT NOTICE