

TOP VIEW

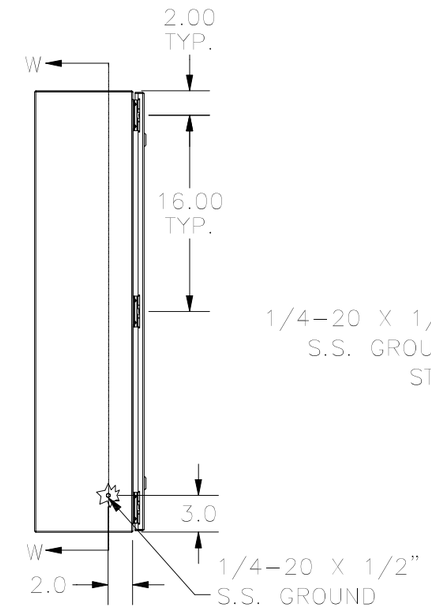

LEFT SIDE VIEW

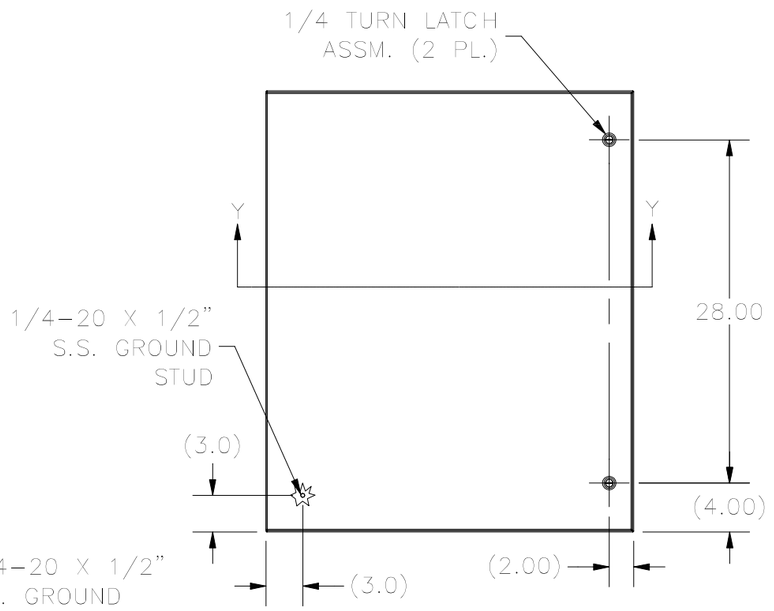

FRONT VIEW



RIGHT SIDE VIEW

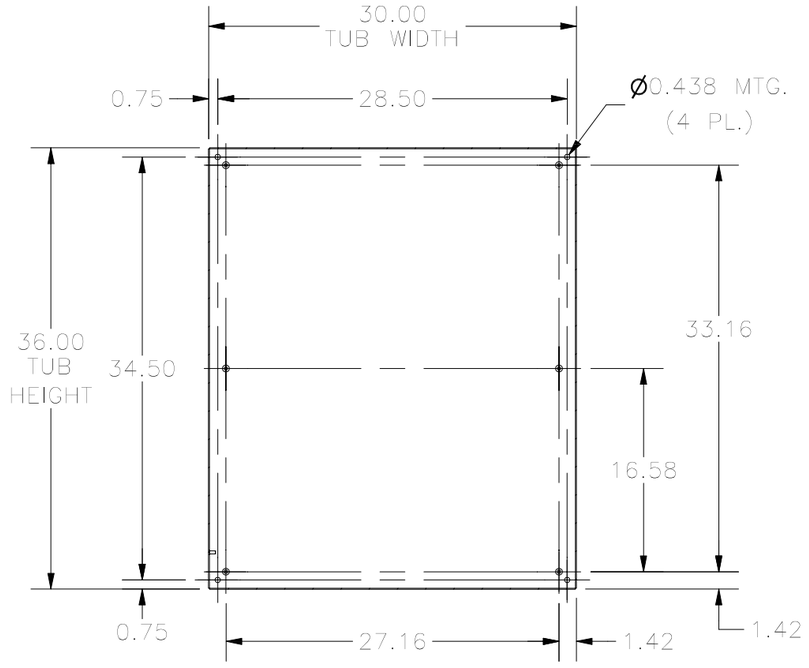

SECTION W-W
(INSIDE BACK OF ENCLOSURE)

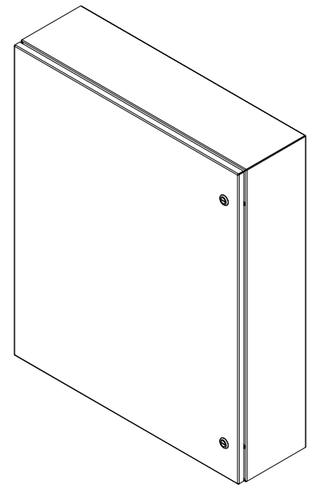

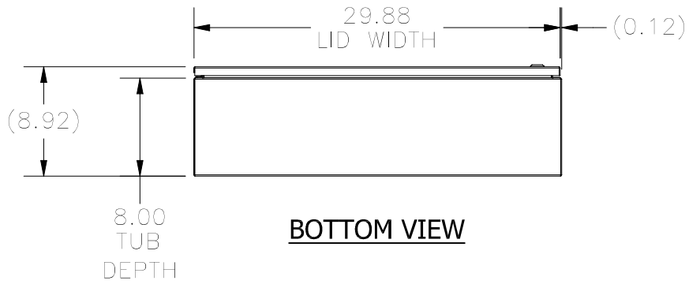

BOTTOM VIEW

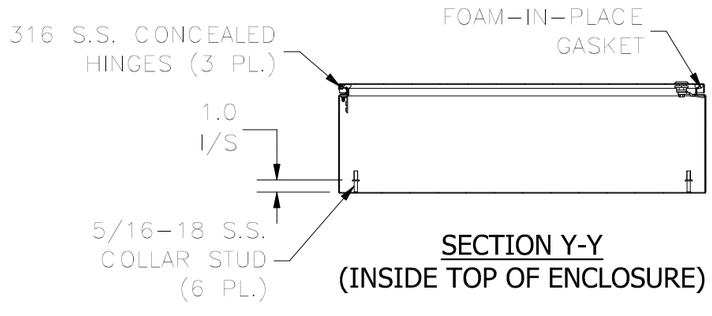

SECTION Y-Y
(INSIDE TOP OF ENCLOSURE)

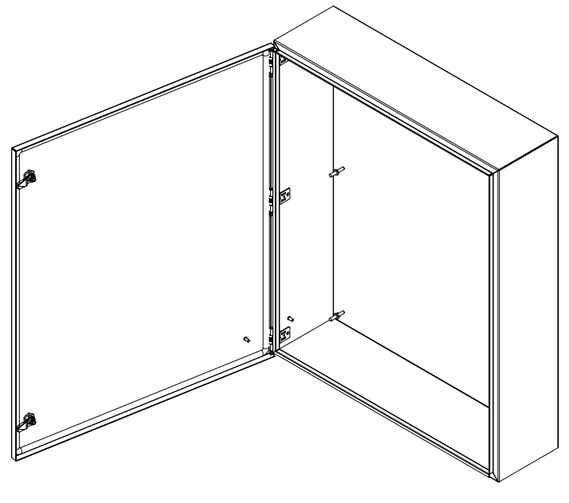

PART #: N412363008SSC
(DATA SUBJECT TO CHANGE WITHOUT NOTICE.)

THIS DRAWING IS PROPERTY OF HUBBELL INC. WIEGMANN
ALL INFORMATION IS PROPRIETARY AND NOT TO BE DUPLICATED