

TOP VIEW

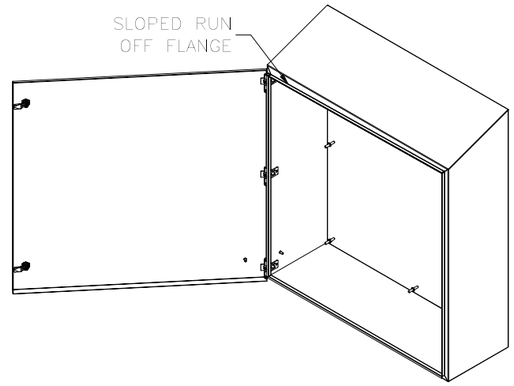

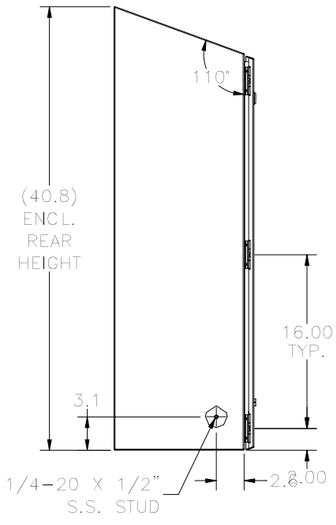

LEFT SIDE VIEW

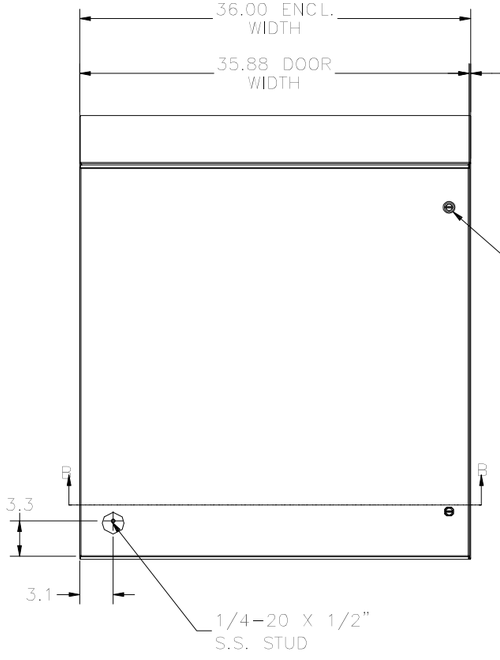

FRONT VIEW

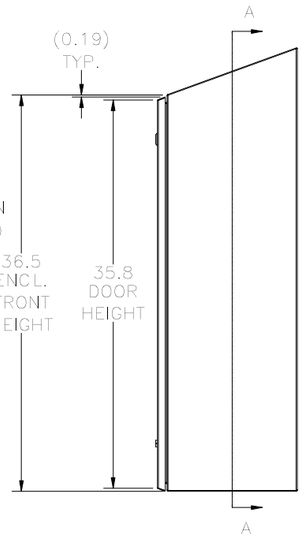

RIGHT SIDE VIEW

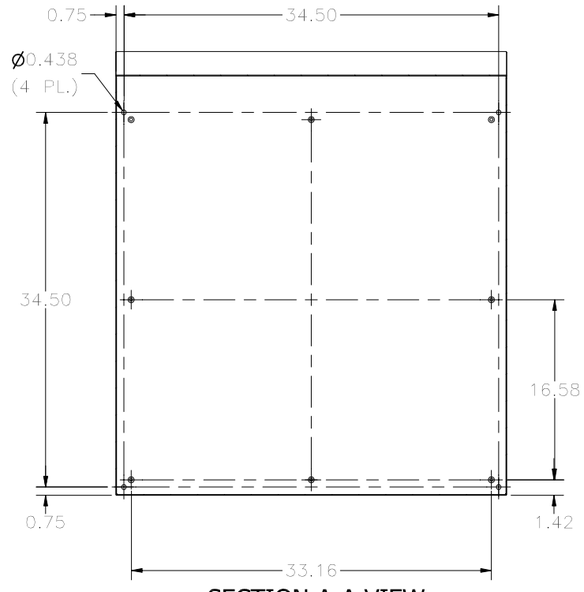

SECTION A-A VIEW
(INSIDE BACK OF ENCL.)

REF. VIEW
(DOOR OPEN)

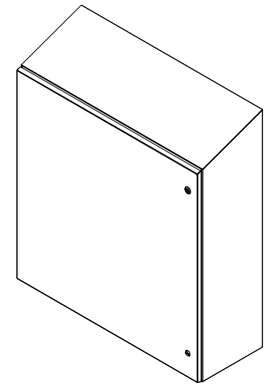

REF. VIEW
(DOOR CLOSED)

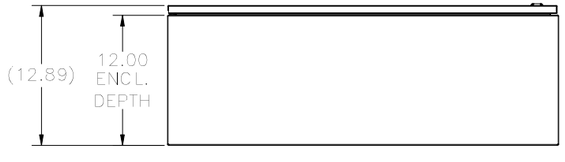

BOTTOM VIEW

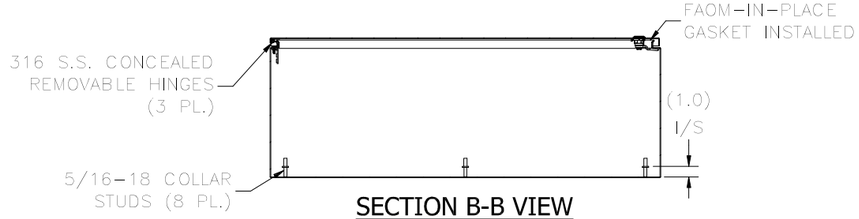

SECTION B-B VIEW
(INSIDE TOP OF ENCL.)

PART#: N412363612CST
(DATA SUBJECT TO CHANGE WITHOUT NOTICE)

THIS DRAWING IS PROPERTY OF HUBBELL INC. WIEGMANN
ALL INFORMATION IS PROPRIETARY AND NOT TO BE DUPLICATED