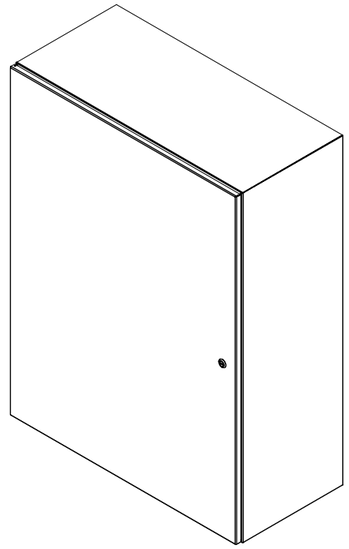



TOP VIEW

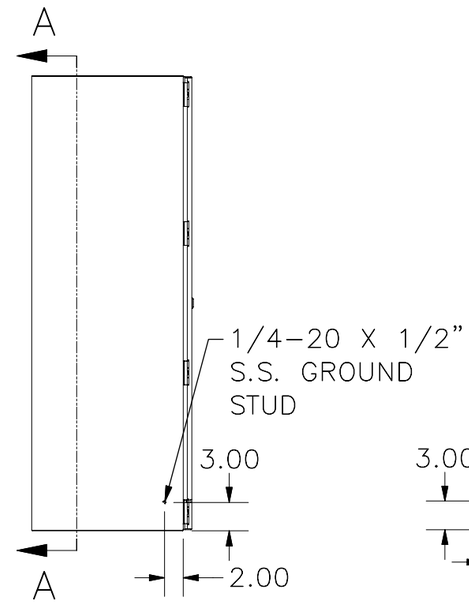

LEFT SIDE VIEW

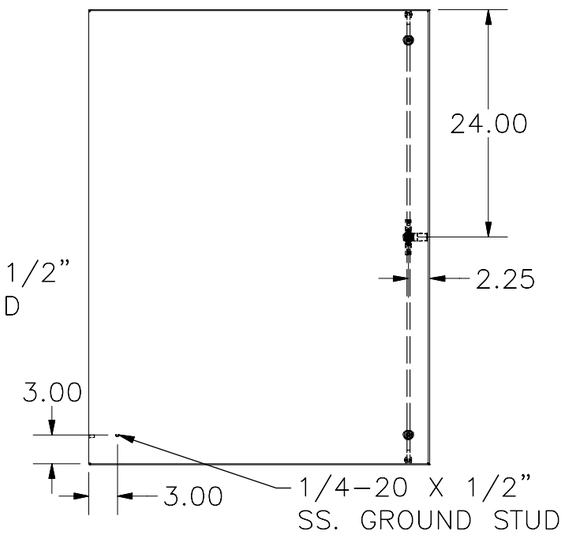

FRONT VIEW

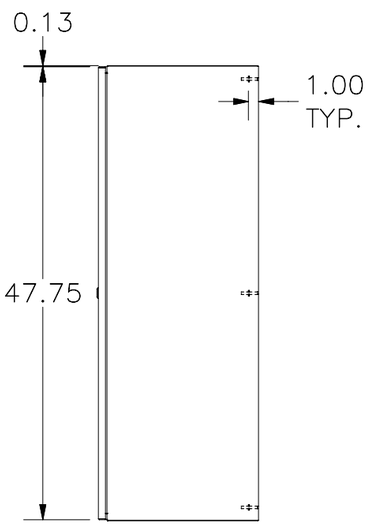

RIGHT SIDE VIEW

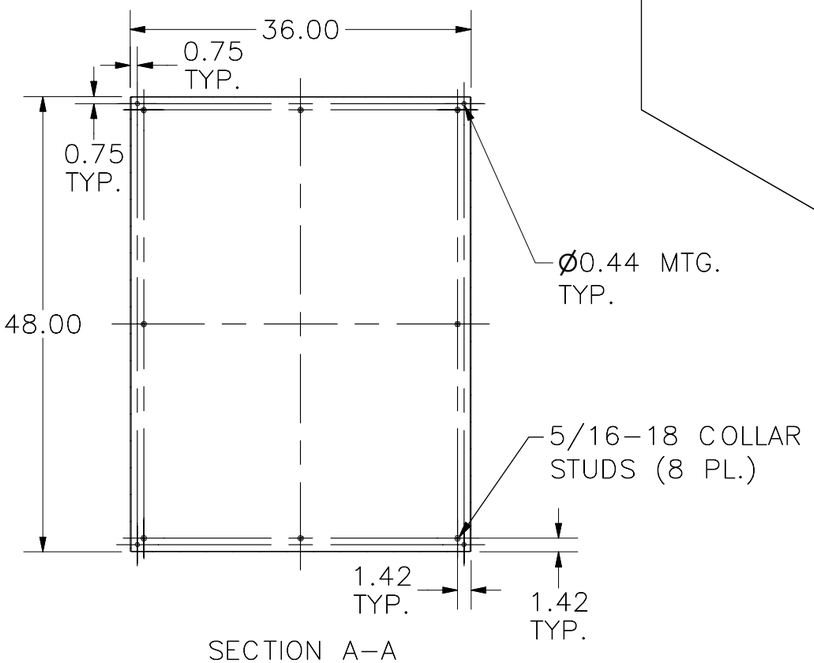

SECTION A–A
(INSIDE BACK OF ENCLOSURE)

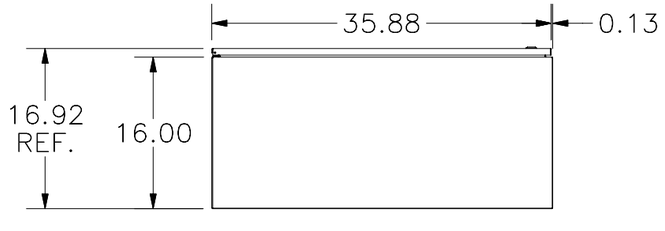

BOTTOM VIEW

PART#: N412483616CLG
(DATA SUBJECT TO CHANGE WITHOUT NOTICE)