

TOP VIEW

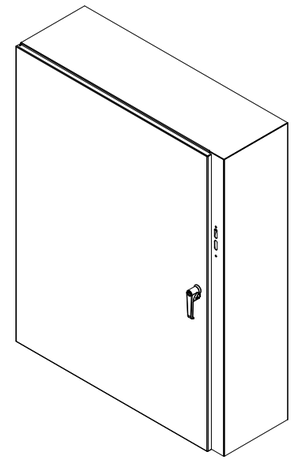

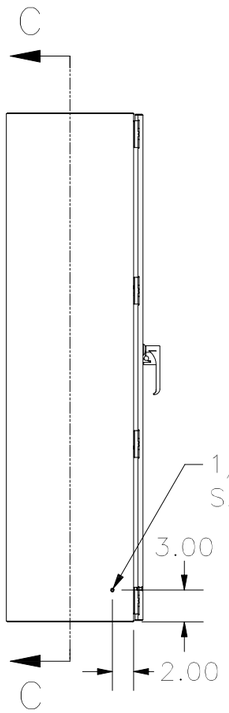

LEFT SIDE VIEW

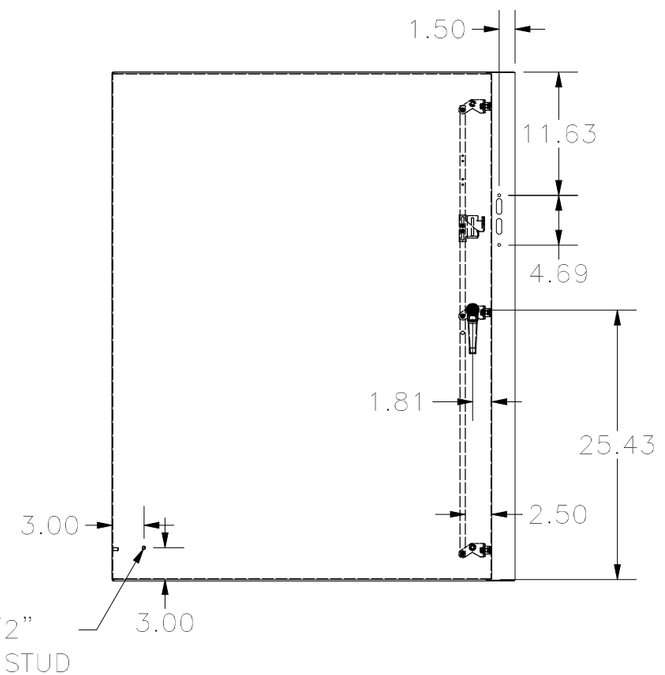

FRONT VIEW

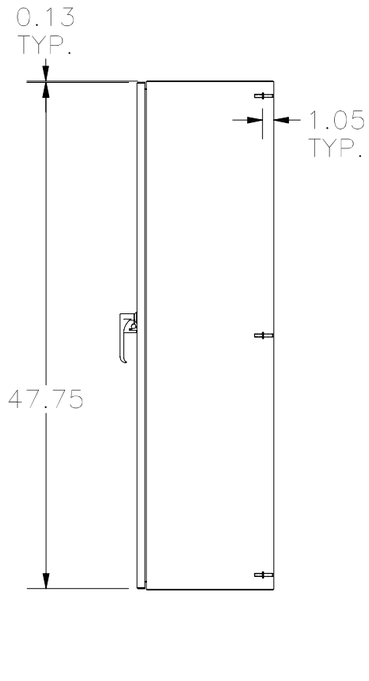

RIGHT SIDE VIEW

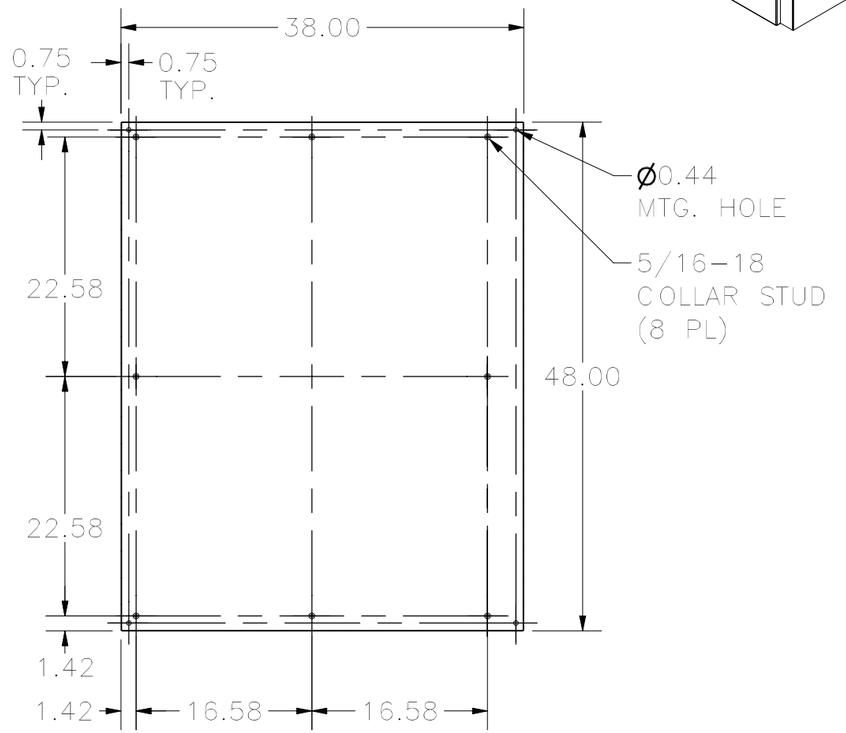

SECTION C–C
(INSIDE BACK OF ENCLOSURE)

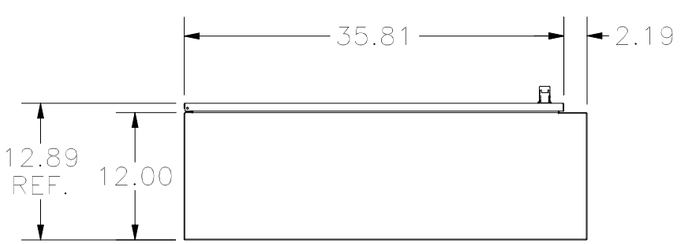

BOTTOM VIEW

PART #: N412483812CD

(DATA SUBJECT TO CHANGE WITHOUT NOTICE.)

THIS DRAWING IS PROPERTY OF HUBBELL INC. WIEGMANN
ALL INFORMATION IS PROPRIETARY AND NOT TO BE DUPLICATED