


TOP VIEW

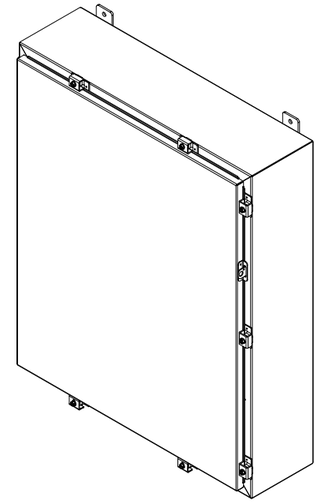

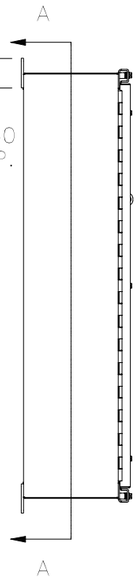


LEFT SIDE

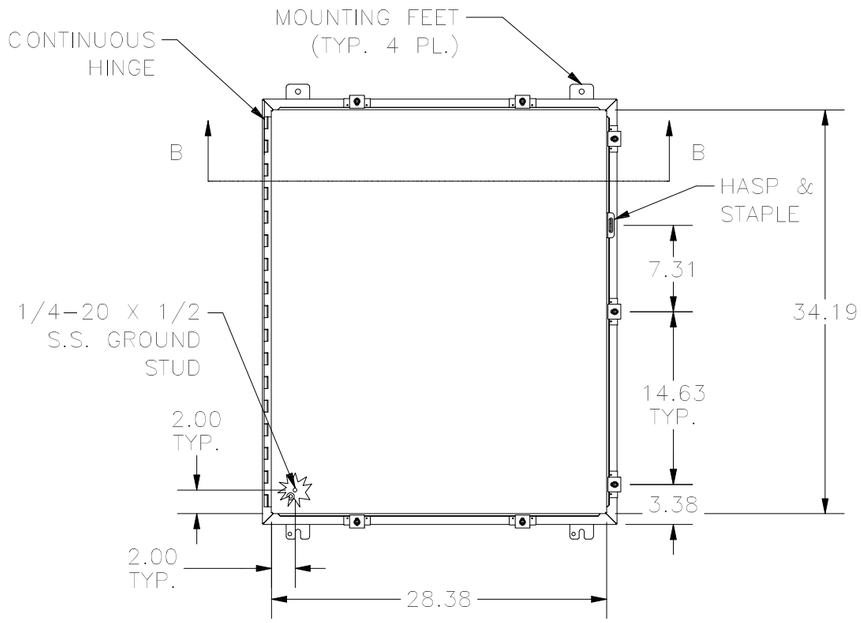


FRONT VIEW

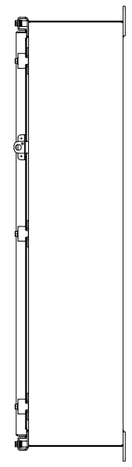

RIGHT VIEW

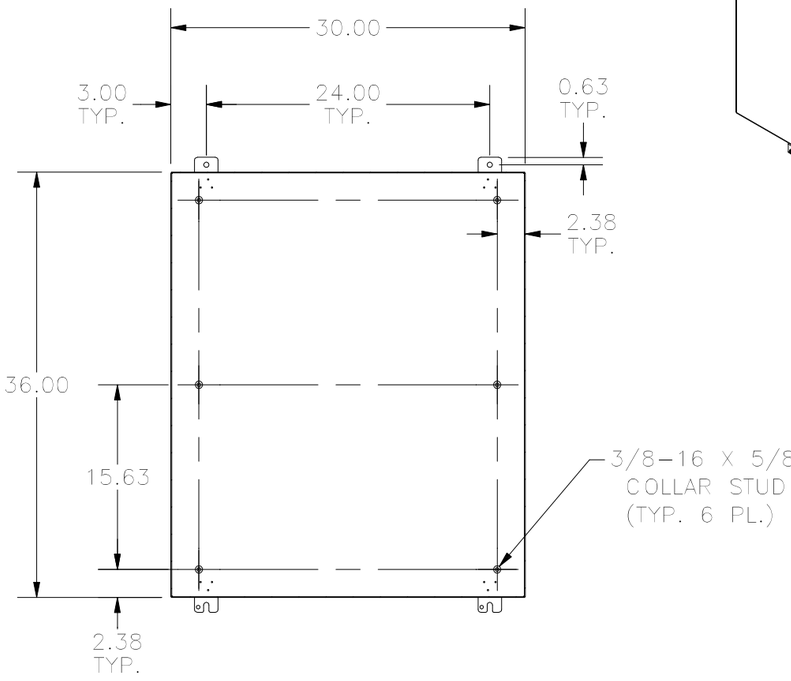


SECTION A-A

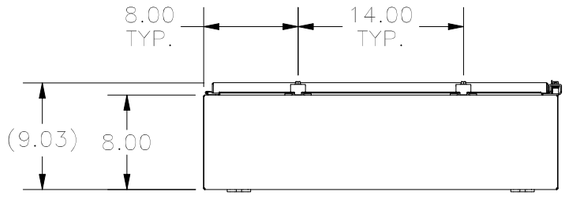


BOTTOM VIEW

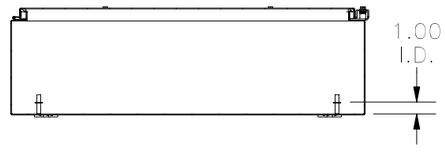


SECTION B-B

PART#: N4363008
(DATA SUBJECT TO CHANGE WITHOUT NOTICE)

THIS DRAWING IS PROPERTY OF HUBBELL INC. WIEGMANN
ALL INFORMATION IS PROPRIETARY AND NOT TO BE DUPLICATED