


LEFT SIDE VIEW

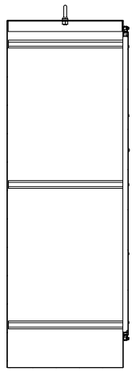

SECTION A-A
(INSIDE RIGHT VIEW OF ENCLOSURE)

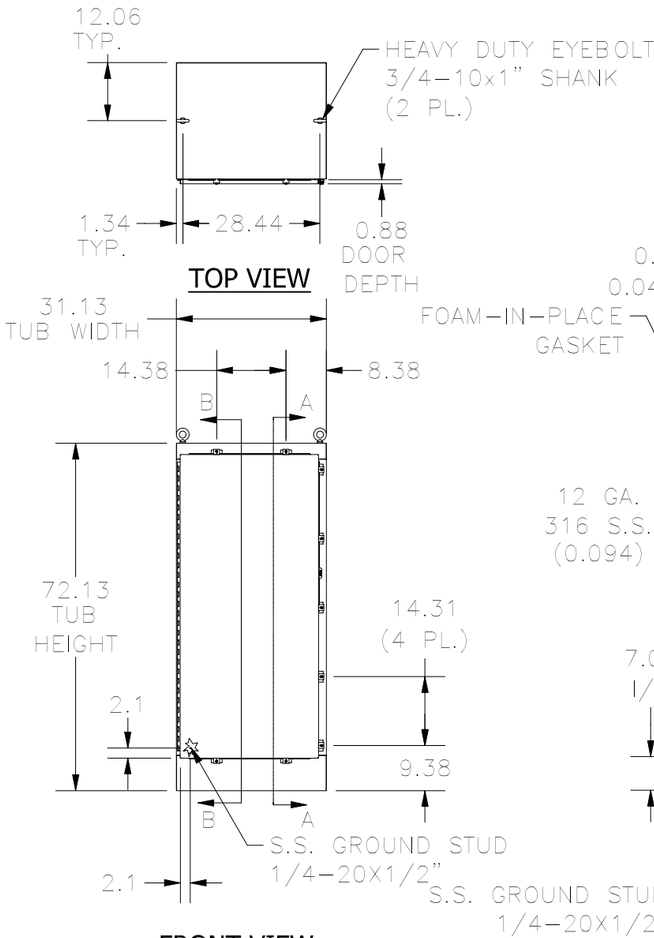


FRONT VIEW

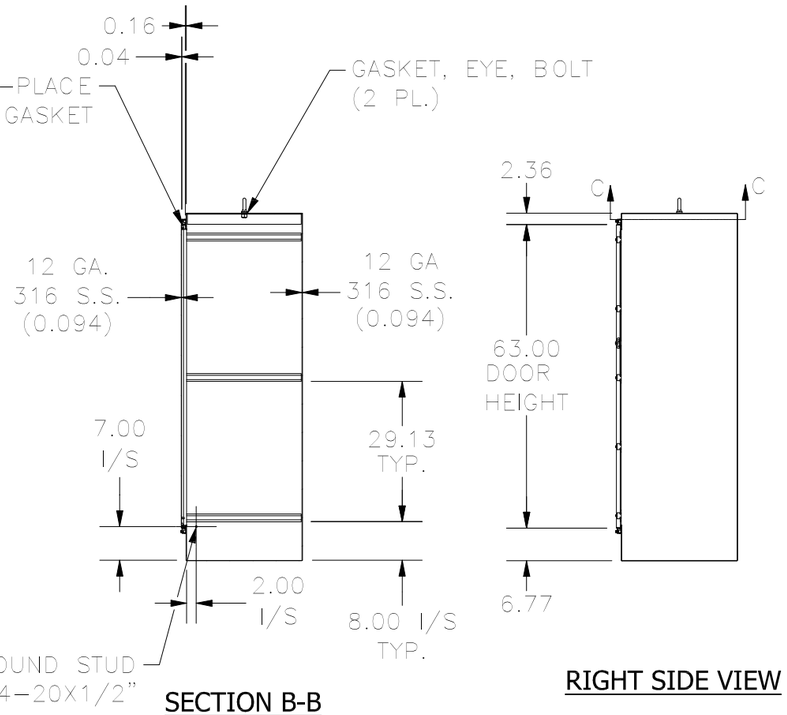


SECTION B-B
(INSIDE LEFT VIEW OF ENCLOSURE)




RIGHT SIDE VIEW

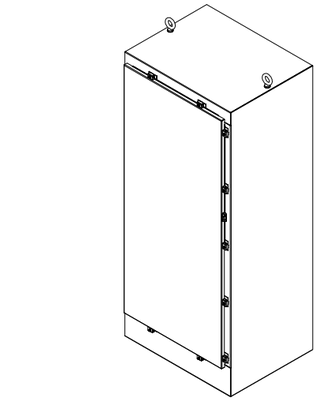

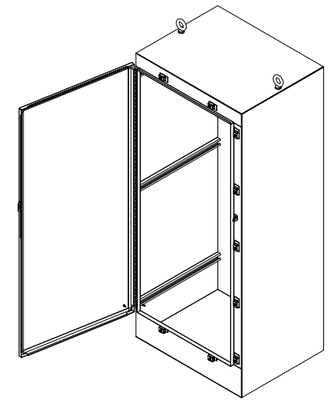

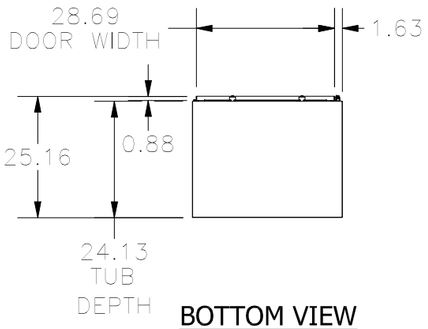


BOTTOM VIEW

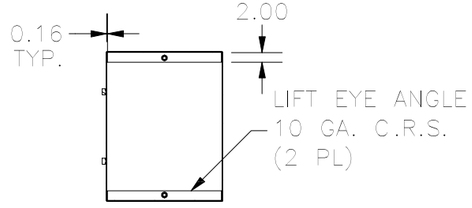


SECTION C-C
(INSIDE TOP OF ENCLOSURE)

PART#: N4S723124FSSSA
(DATA SUBJECT TO CHANGE WITHOUT NOTICE)

THIS DRAWING IS PROPERTY OF HUBBELL INC. WIEGMANN
ALL INFORMATION IS PROPRIETARY AND NOT TO BE DUPLICATED