

LEFT SIDE VIEW

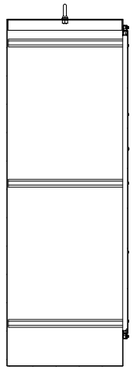

SECTION A-A
(INSIDE RIGHT VIEW OF ENCLOSURE)

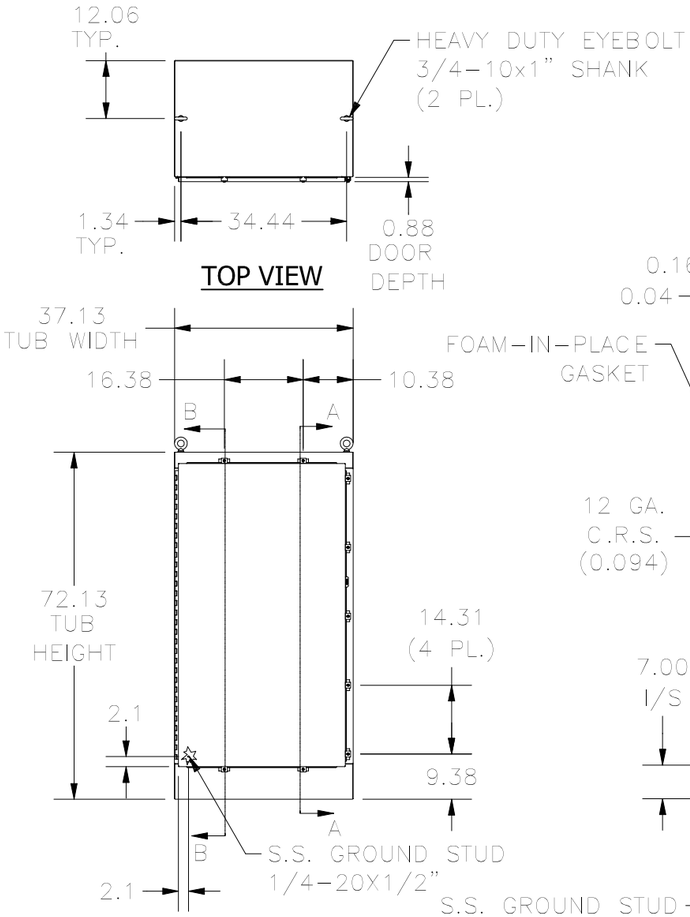

FRONT VIEW

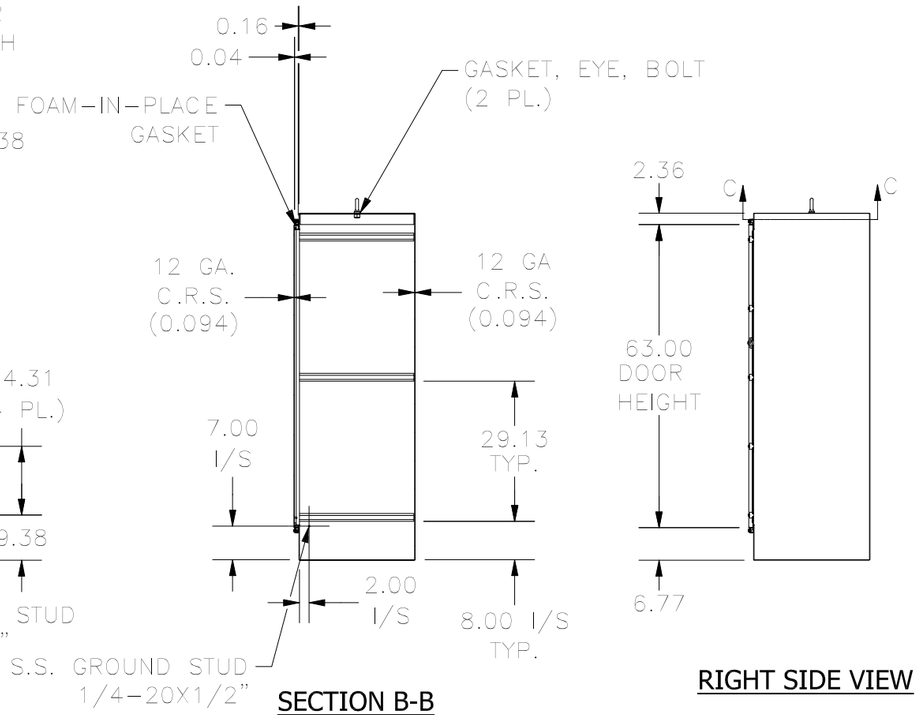

SECTION B-B
(INSIDE LEFT VIEW OF ENCLOSURE)

RIGHT SIDE VIEW

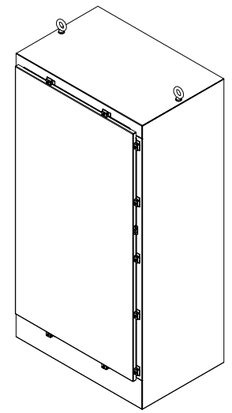

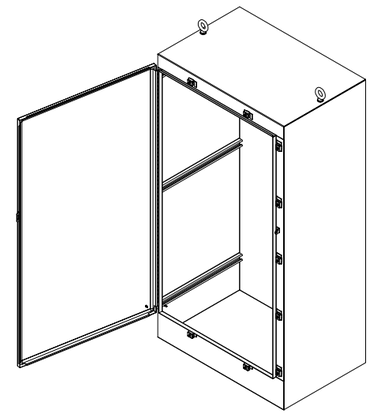

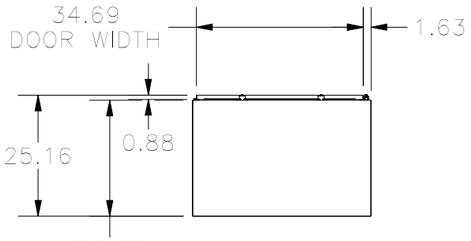

BOTTOM VIEW

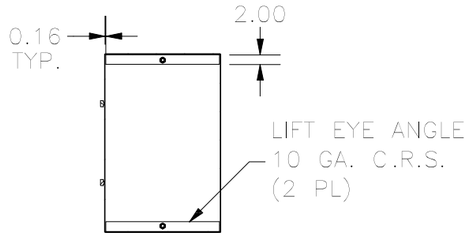

SECTION C-C
(INSIDE TOP OF ENCLOSURE)

PART#: N4S723724FS
(DATA SUBJECT TO CHANGE WITHOUT NOTICE)

THIS DRAWING IS PROPERTY OF HUBBELL INC. WIEGMANN
ALL INFORMATION IS PROPRIETARY AND NOT TO BE DUPLICATED