

TOP VIEW

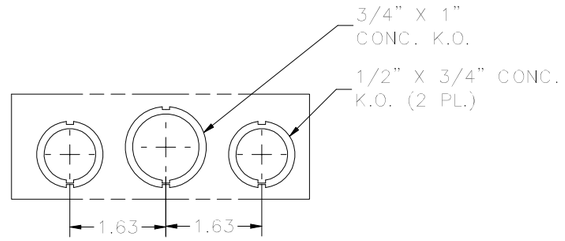

DETAIL C (KNOCKOUT DETAIL)

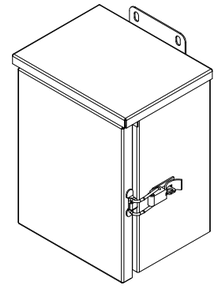

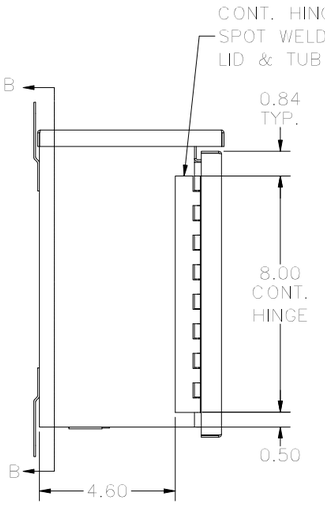

LEFT SIDE VIEW

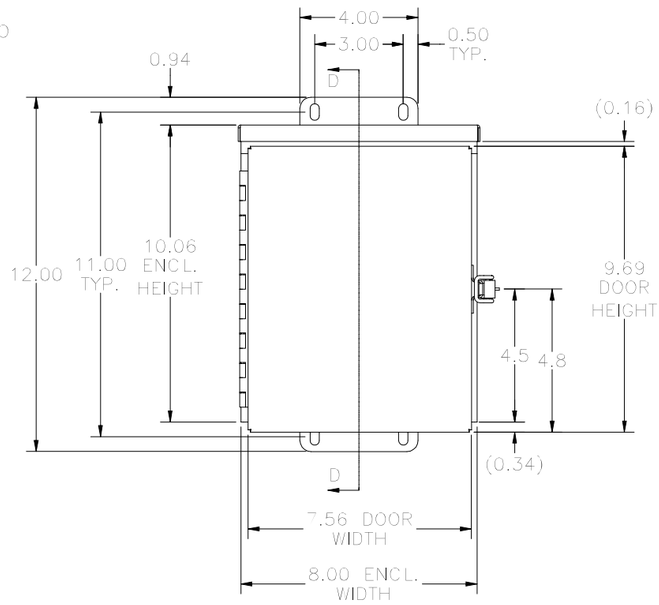

FRONT VIEW

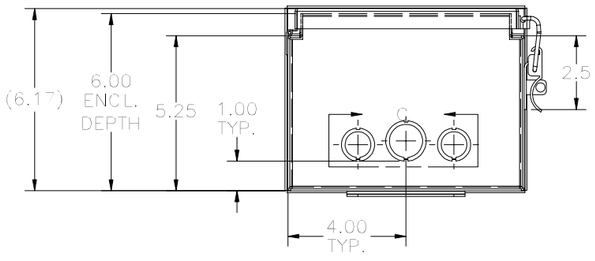

BOTTOM VIEW

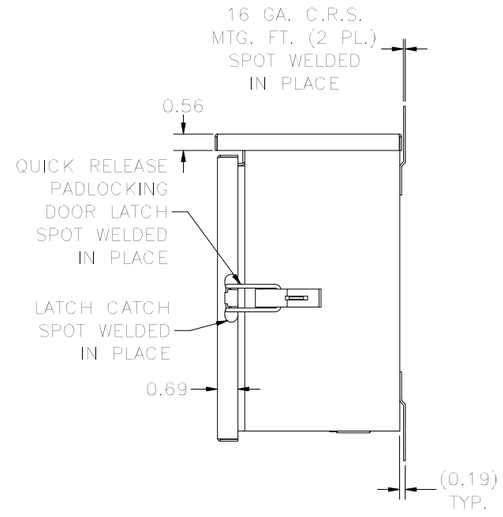

RIGHT SIDE VIEW

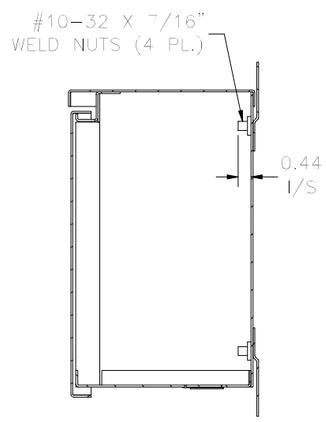

SECTION D-D VIEW
(INSIDE LEFT OF ENCL.)

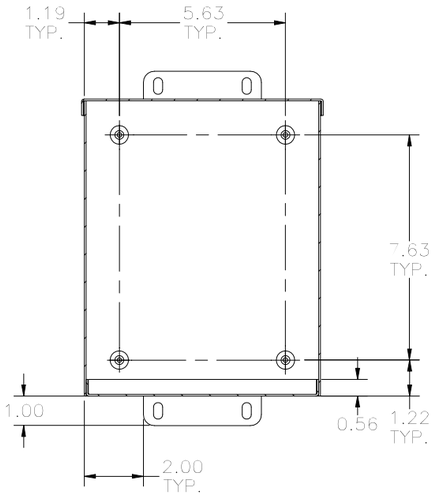

SECTION B-B VIEW
(INSIDE BACK OF ENCL.)

PART#: RHC081006
(DATA SUBJECT TO CHANGE WITHOUT NOTICE)

THIS DRAWING IS PROPERTY OF HUBBELL INC. WIEGMANN
ALL INFORMATION IS PROPRIETARY AND NOT TO BE DUPLICATED