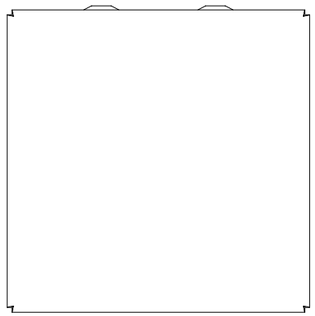

TOP VIEW

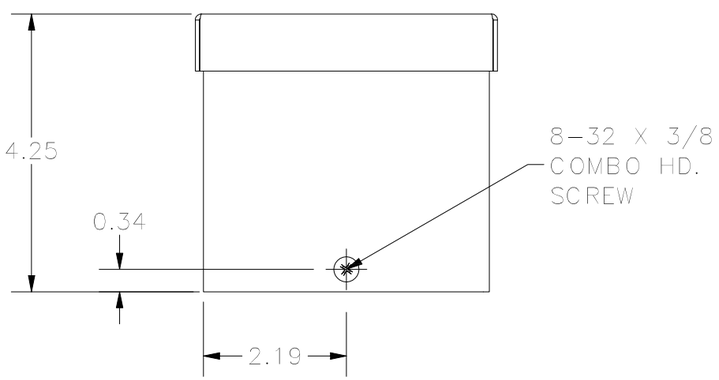

FRONT VIEW

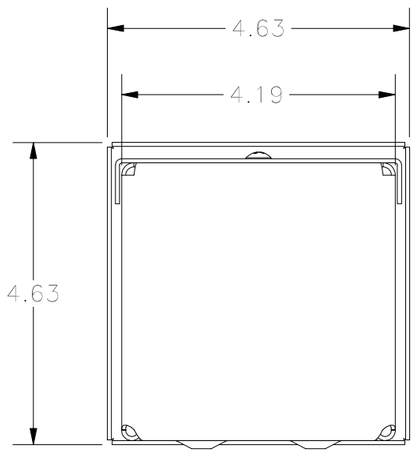

BOTTOM VIEW

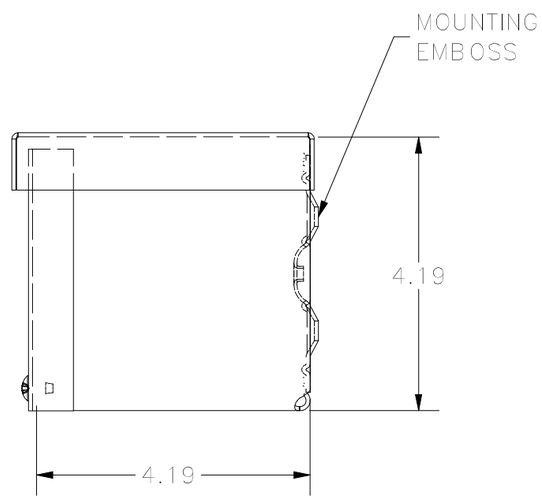

RIGHT VIEW

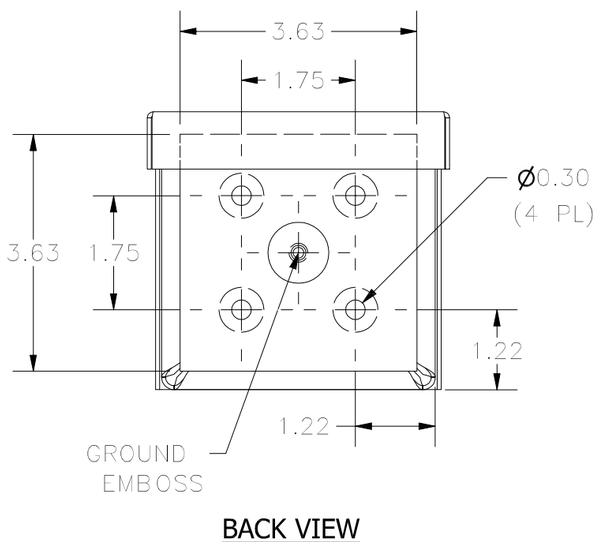

BACK VIEW

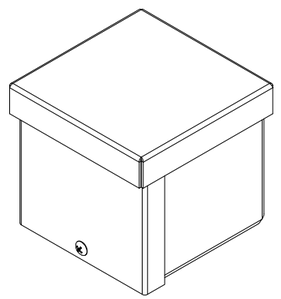

PART#: RSC040404NK
(DATA SUBJECT TO CHANGE WITHOUT NOTICE)

THIS DRAWING IS PROPERTY OF HUBBELL INC. WIEGMANN
ALL INFORMATION IS PROPRIETARY AND NOT TO BE DUPLICATED