

DETAIL A (2 PL.)
(LID ATTACHMENT DETAIL)

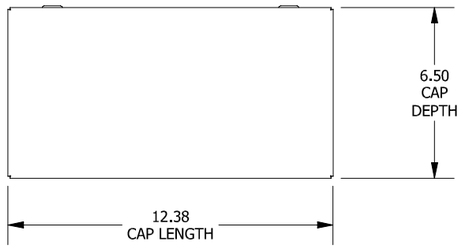

TOP VIEW

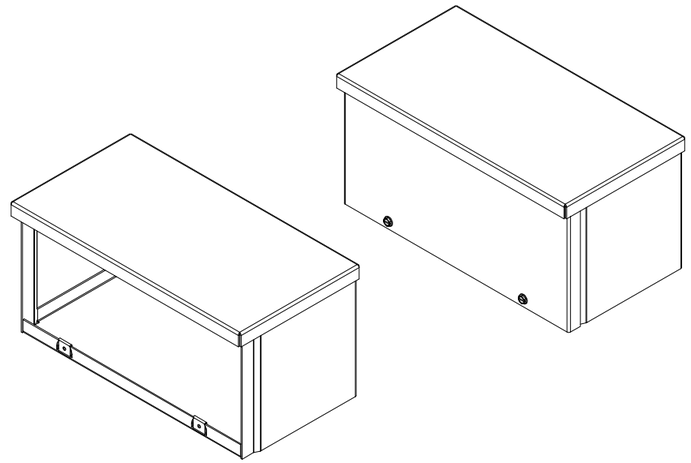

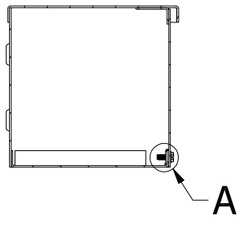

SECTION A-A
(INSIDE RIGHT OF ENCL.)

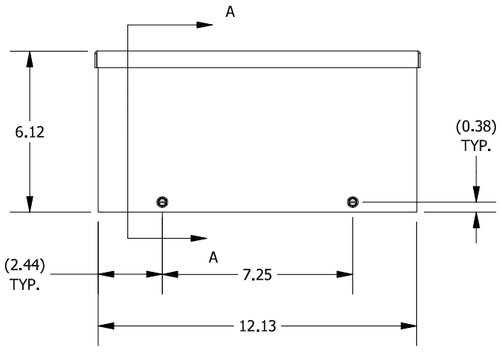

FRONT VIEW

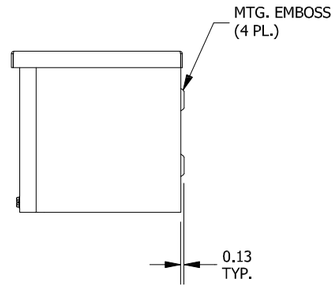

RIGHT SIDE VIEW

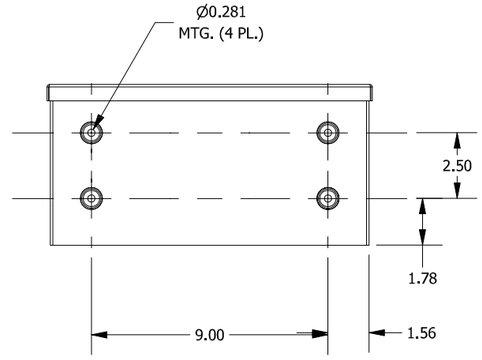

BACK VIEW

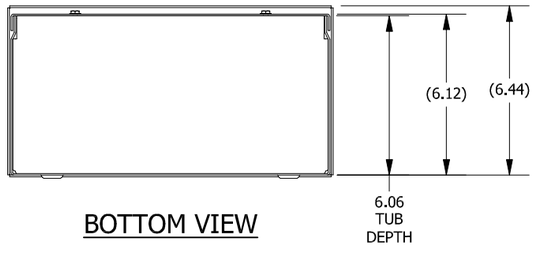

BOTTOM VIEW

PART#: RSCG060612GNK
(DATA SUBJECT TO CHANGE WITHOUT NOTICE)

THIS DRAWING IS PROPERTY OF HUBBELL INC. WIEGMANN
ALL INFORMATION IS PROPRIETARY AND NOT TO BE DUPLICATED