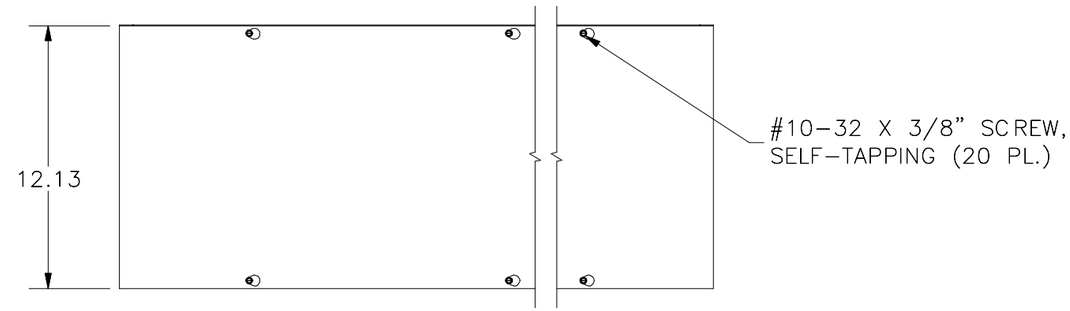

TOP VIEW

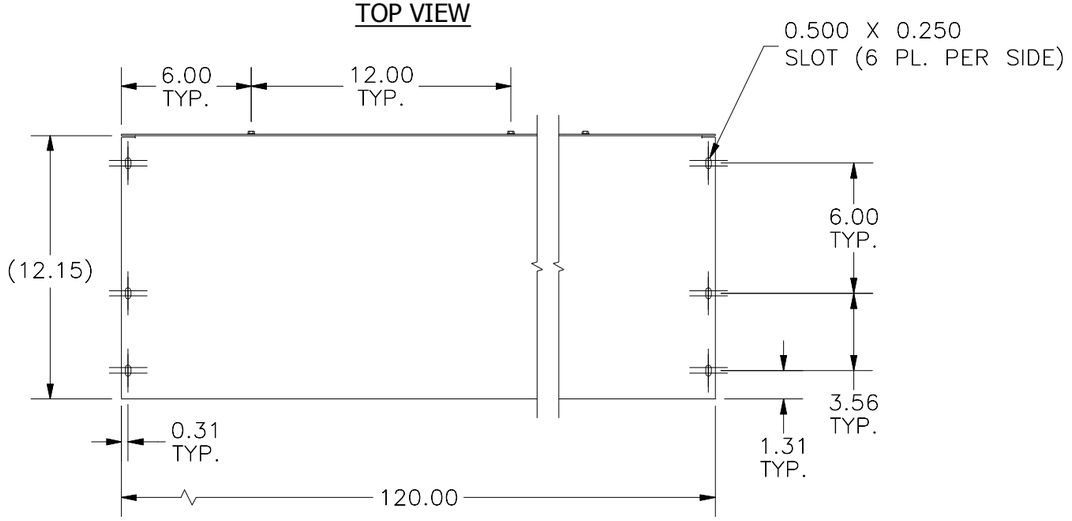

FRONT VIEW

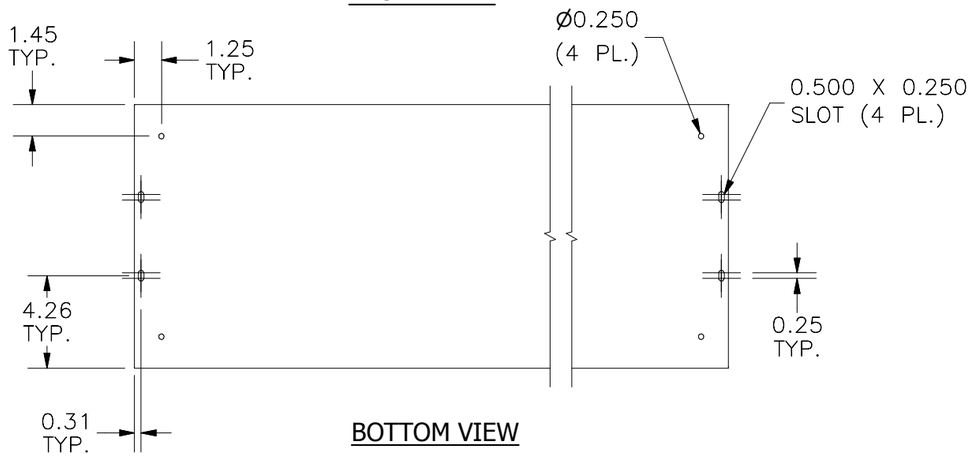

BOTTOM VIEW

RIGHT VIEW

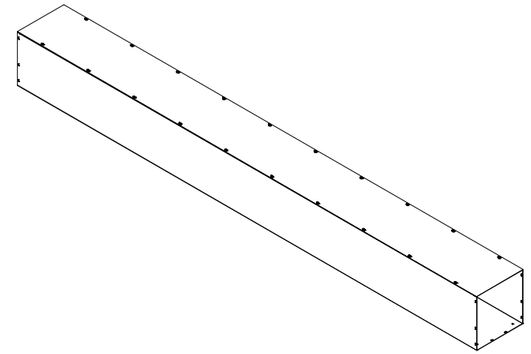

PART#: S1212120GNK
(DATA SUBJECT TO CHANGE WITHOUT NOTICE)

THIS DRAWING IS PROPERTY OF HUBBELL INC. WIEGMANN
ALL INFORMATION IS PROPRIETARY AND NOT TO BE DUPLICATED